बिड संख्या/Bid Number: GEM/2026/B/7833011
दिनांक /Dated: 31-07-2026

दर अनुबंध बिड दस्तावेज़ / Rate Contract Bid Document

This Rate Contract Bid is governed by General Terms and Conditions of Rate Contract

बिड विवरण/Bid Details	
बिड बंद होने की तारीख/समय /Bid End Date/Time	20-08-2026 17:00:00
बिड खुलने की तारीख/समय /Bid Opening Date/Time	20-08-2026 17:30:00
बिड पेशकश वैधता (बंद होने की तारीख से)/Bid Offer Validity (From End Date)	180 (Days)
मंत्रालय/राज्य का नाम/Ministry/State Name	Chhattisgarh
विभाग का नाम/Department Name	Energy Department Chhattisgarh
संगठन का नाम/Organisation Name	Chhattisgarh State Renewable Energy Development Agency (creda)
कार्यालय का नाम/Office Name	Raipur
शिकायत निवारण के संपर्क विवरण/ Contact details of Grievance redressal	HOD Email id :bhanu.pratap10@cg.gov.in Buyer Email id: nikhilgarg.creda@gmail.com

बिड विवरण/Bid Details	
वस्तु श्रेणी /Item Category	Off Grid SPVPP cap 1000W 150AH 48V with LMLA battery bank 12V cell allowed , Off Grid SPVPP cap 2000W 300AH 48V with LMLA battery bank only 02V cell allowed , Off Grid SPVPP cap 3000W 400AH 48V with LMLA battery bank Only 02V cell allowed , Off Grid SPVPP cap 4000W 400AH 96V with LMLA battery bank Only 02V cell allowed , Off Grid SPVPP cap 6000W 400AH 96V with LMLA battery bank Only 02V cell allowed , Off Grid SPVPP cap 8000W 400AH 120V with LMLA battery bank Only 02V cell allowed , Off Grid SPVPP cap 10000W 300AH 240V with LMLA battery bank Only 02V cell allowed , Off Grid SPVPP cap 15000W 400AH 240V with LMLA battery bank Only 02V cell allowed , Off Grid SPVPP cap 20000W 600AH 240V with LMLA battery bank Only 02V cell allowed , Off Grid SPVPP cap 25000W 600AH 240V with LMLA battery bank Only 02V cell allowed , Off Grid SPVPP cap 30000W 800AH 240V with LMLA battery bank Only 02V cell allowed , Off Grid SPVPP cap 40000W 1000AH 240V with LMLA battery bank Only 02V cell allowed , Off Grid SPVPP cap 45000W 1000AH 240V with LMLA battery bank Only 02V cell allowed , Off Grid SPVPP cap 50000W 1000AH 240V with LMLA battery bank Only 02V cell allowed , Off Grid SPVPP cap 1000W 150AH 48V with T-Gel battery bank 12V cell allowed , Off Grid SPVPP cap 2000W 300AH 48V with T-Gel battery bank only 02V cell allowed , Off Grid SPVPP cap 3000W 400AH 48V with T-Gel battery bank Only 02V cell allowed , Off Grid SPVPP cap 4000W 400AH 96V with T-Gel battery bank Only 02V cell allowed , Off Grid SPVPP cap 6000W 400AH 96V with T-Gel battery bank Only 02V cell allowed , Off Grid SPVPP cap 8000W 400AH 120V with T-Gel battery bank Only 02V cell allowed , Off Grid SPVPP cap 10000W 300AH 240V with T-Gel battery bank Only 02V cell allowed , Off Grid SPVPP cap 15000W 400AH 240V with T-Gel battery bank Only 02V cell allowed , Off Grid SPVPP cap 20000W 600AH 240V with T-Gelbattery bank Only 02V cell allowed , Off Grid SPVPP cap 25000W 600AH 240V with T-Gel battery bank Only 02V cell allowed , Off Grid SPVPP cap 30000W 800AH 240V with T-Gel battery bank Only 02V cell allowed , Off Grid SPVPP cap 40000W 1000AH 240V with T-Gel battery bank Only 02V cell allowed , Off Grid SPVPP cap 45000W 1000AH 240V with T-Gel battery bank Only 02V cell allowed , Off Grid SPVPP cap 50000W 1000AH 240V with T-Gel battery bank Only 02V cell allowed , Roof Top Mounted Hot Dip Galvanized MMS 80 MIC per kg , Parking Shed type Galvanized MMS 80 MIC per kg
GeMARPTS में खोजी गई स्ट्रिंग्स / Searched Strings used in GeMARPTS	Solar off
GeMARPTS में खोजा गया परिणाम / Searched Result generated in GeMARPTS	Off - Grid Solar Photovoltaic (PV) Power Plant (V2)
अधिसूचना के लिए चयनित प्रासंगिक श्रेणियाँ / Relevant Categories selected for notification	• Solar Photovoltaic Modules / Panels - Thin Film Terrestrial • Inverter (V2) • Off - Grid Solar Photovoltaic (PV) Power Plant (V2)
बीओक्यू शीर्षक /BOQ Title	Off Grid Solar Photovoltaic Power Plant
बिडर का न्यूनतम औसत वार्षिक टर्नओवर (3 वर्षों का) /Minimum Average Annual Turnover of the bidder (For 3 Years)	500 Lakh (s)

बिड विवरण/**Bid Details**	
उन्हीं/समान सेवा के लिए अपेक्षित विगत अनुभव के वर्ष/**Years of Past Experience Required for same/similar service**	3 Year (s)
टर्नओवर पात्रता मानदंड/**Turnover eligibility criteria**	To be verified by the buyer at the time of technical evaluation
स्टार्टअप के लिए अनुभव के वर्षों और टर्नओवर से छूट प्रदान की गई है / **Startup Relaxation for Years Of Experience and Turnover**	Yes | Complete
विक्रेता से मांगे गए दस्तावेज़/**Document required from seller**	Experience Criteria,Past Performance,Bidder Turnover,Certificate (Requested in ATC),OEM Authorization Certificate,Additional Doc 1 (Requested in ATC),Additional Doc 2 (Requested in ATC),Additional Doc 3 (Requested in ATC),Additional Doc 4 (Requested in ATC),Compliance of BoQ specification and supporting document *In case any bidder is seeking exemption from Experience / Turnover Criteria, the supporting documents to prove his eligibility for exemption must be uploaded for evaluation by the buyer
क्या आप निविदाकारों द्वारा अपलोड किए गए दस्तावेज़ों को निविदा में भाग लेने वाले सभी निविदाकारों को दिखाना चाहते हैं? संदर्भ मेनू है/**Do you want to show documents uploaded by bidders to all bidders participated in bid?**	No
बिड लगाने की समय सीमा स्वतः नहीं बढ़ाने के लिए आवश्यक बिड की संख्या। / **Minimum number of bids required to disable automatic bid extension**	3
दिनों की संख्या, जिनके लिए बिड लगाने की समय-सीमा बढ़ाई जाएगी। / **Number of days for which Bid would be auto-extended**	7
ऑटो एक्सटेंशन अधिकतम कितनी बार किया जाना है। / **Number of Auto Extension count**	3
बिड से रिवर्स नीलामी सक्रिय किया/**Bid to RA enabled**	No

बिड विवरण/Bid Details	
दर अनुबंध और शीर्षक / **Rate Contract & Title**	Yes ; Off Grid SPVPP cap 1000W 150AH 48V with LMLA battery bank 12V cell allowed, Off Grid SPVPP cap 2000W 300AH 48V with LMLA battery bank only 02V cell allowed, Off Grid SPVPP cap 3000W 400AH 48V with LMLA battery bank Only 02V cell allowed, Off Grid SPVPP cap 4000W 400AH 96V with LMLA battery bank Only 02V cell allowed, Off Grid SPVPP cap 6000W 400AH 96V with LMLA battery bank Only 02V cell allowed, Off Grid SPVPP cap 8000W 400AH 120V with LMLA battery bank Only 02V cell allowed, Off Grid SPVPP cap 10000W 300AH 240V with LMLA battery bank Only 02V cell allowed, Off Grid SPVPP cap 15000W 400AH 240V with LMLA battery bank Only 02V cell allowed, Off Grid SPVPP cap 20000W 600AH 240V with LMLA battery bank Only 02V cell allowed, Off Grid SPVPP cap 25000W 600AH 240V with LMLA battery bank Only 02V cell allowed, Off Grid SPVPP cap 30000W 800AH 240V with LMLA battery bank Only 02V cell allowed, Off Grid SPVPP cap 40000W 1000AH 240V with LMLA battery bank Only 02V cell allowed, Off Grid SPVPP cap 45000W 1000AH 240V with LMLA battery bank Only 02V cell allowed, Off Grid SPVPP cap 50000W 1000AH 240V with LMLA battery bank Only 02V cell allowed, Off Grid SPVPP cap 1000W 150AH 48V with T-Gel battery bank 12V cell allowed, Off Grid SPVPP cap 2000W 300AH 48V with T-Gel battery bank only 02V cell allowed, Off Grid SPVPP cap 3000W 400AH 48V with T-Gel battery bank Only 02V cell allowed, Off Grid SPVPP cap 4000W 400AH 96V with T-Gel battery bank Only 02V cell allowed, Off Grid SPVPP cap 6000W 400AH 96V with T-Gel battery bank Only 02V cell allowed, Off Grid SPVPP cap 8000W 400AH 120V with T-Gel battery bank Only 02V cell allowed, Off Grid SPVPP cap 10000W 300AH 240V with T-Gel battery bank Only 02V cell allowed, Off Grid SPVPP cap 15000W 400AH 240V with T-Gel battery bank Only 02V cell allowed, Off Grid SPVPP cap 20000W 600AH 240V with T-Gelbattery bank Only 02V cell allowed, Off Grid SPVPP cap 25000W 600AH 240V with T-Gel battery bank Only 02V cell allowed, Off Grid SPVPP cap 30000W 800AH 240V with T-Gel battery bank Only 02V cell allowed, Off Grid SPVPP cap 40000W 1000AH 240V with T-Gel battery bank Only 02V cell allowed, Off Grid SPVPP cap 45000W 1000AH 240V with T-Gel battery bank Only 02V cell allowed, Off Grid SPVPP cap 50000W 1000AH 240V with T-Gel battery bank Only 02V cell allowed, Roof Top Mounted Hot Dip Galvanized MMS 80 MIC per kg, Parking Shed type Galvanized MMS 80 MIC per kg
दर अनुबंध की वैधता अवधि / **Validity Period Of Rate Contract**	12 Months
तकनीकी मूल्यांकन के दौरान तकनीकी स्पष्टीकरण हेतु अनुमत समय /**Time allowed for Technical Clarifications during technical evaluation**	3 Days
निरीक्षण आवश्यक (सूचीबद्ध निरीक्षण प्राधिकरण /जेम के साथ पूर्व पंजीकृत एजेंसियों द्वारा)/**Inspection Required (By Empanelled Inspection Authority / Agencies pre-registered with GeM)**	No
अनुमानित बिड मूल्य / **Estimated Bid Value**	1000000000
मूल्यांकन पद्धति/**Evaluation Method**	Item wise consignee wise evaluation

ईएमडी विवरण/EMD Detail

एडवाईजरी बैंक/Advisory Bank	ICICI
ईएमडी राशि/EMD Amount	1000000

Discount Slab Range

Off Grid Spvpp Cap 1000w 150ah 48v With Lmla Battery Bank 12v Cell Allowed

Slab 1	1 - and above Unit

Off Grid Spvpp Cap 2000w 300ah 48v With Lmla Battery Bank Only 02v Cell Allowed

Slab 1	1 - and above Unit

Off Grid Spvpp Cap 3000w 400ah 48v With Lmla Battery Bank Only 02v Cell Allowed

Slab 1	1 - and above Unit

Off Grid Spvpp Cap 4000w 400ah 96v With Lmla Battery Bank Only 02v Cell Allowed

Slab 1	1 - and above Unit

Off Grid Spvpp Cap 6000w 400ah 96v With Lmla Battery Bank Only 02v Cell Allowed

Slab 1	1 - and above Unit

Off Grid Spvpp Cap 8000w 400ah 120v With Lmla Battery Bank Only 02v Cell Allowed

Slab 1	1 - and above Unit

Off Grid Spvpp Cap 10000w 300ah 240v With Lmla Battery Bank Only 02v Cell Allowed

Slab 1	1 - and above Unit

Off Grid Spvpp Cap 15000w 400ah 240v With Lmla Battery Bank Only 02v Cell Allowed

Slab 1	1 - and above Unit

Off Grid Spvpp Cap 20000w 600ah 240v With Lmla Battery Bank Only 02v Cell Allowed

Slab 1	1 - and above Unit

Off Grid Spvpp Cap 25000w 600ah 240v With Lmla Battery Bank Only 02v Cell Allowed

Slab 1	1 - and above Unit

Off Grid Spvpp Cap 30000w 800ah 240v With Lmla Battery Bank Only 02v Cell Allowed

Slab 1	1 - and above Unit

Off Grid Spvpp Cap 40000w 1000ah 240v With Lmla Battery Bank Only 02v Cell Allowed

Slab 1	1 - and above Unit

Off Grid Spvpp Cap 45000w 1000ah 240v With Lmla Battery Bank Only 02v Cell Allowed

Slab 1	1 - and above Unit

Off Grid Spvpp Cap 50000w 1000ah 240v With Lmla Battery Bank Only 02v Cell Allowed

Slab 1	1 - and above Unit

Off Grid Spvpp Cap 1000w 150ah 48v With T-gel Battery Bank 12v Cell Allowed

Slab 1	1 - and above Unit

Off Grid Spvpp Cap 2000w 300ah 48v With T-gel Battery Bank Only 02v Cell Allowed

Slab 1	1 - and above Unit

Off Grid Spvpp Cap 3000w 400ah 48v With T-gel Battery Bank Only 02v Cell Allowed

Slab 1	1 - and above Unit

Off Grid Spvpp Cap 4000w 400ah 96v With T-gel Battery Bank Only 02v Cell Allowed

Slab 1	1 - and above Unit

Off Grid Spvpp Cap 6000w 400ah 96v With T-gel Battery Bank Only 02v Cell Allowed

Slab 1	1 - and above Unit

Off Grid Spvpp Cap 8000w 400ah 120v With T-gel Battery Bank Only 02v Cell Allowed

Slab 1	1 - and above Unit

Off Grid Spvpp Cap 10000w 300ah 240v With T-gel Battery Bank Only 02v Cell Allowed

Slab 1	1 - and above Unit

Off Grid Spvpp Cap 15000w 400ah 240v With T-gel Battery Bank Only 02v Cell Allowed

Slab 1	1 - and above Unit

Off Grid Spvpp Cap 20000w 600ah 240v With T-gelbattery Bank Only 02v Cell Allowed

Slab 1	1 - and above Unit

Off Grid Spvpp Cap 25000w 600ah 240v With T-gel Battery Bank Only 02v Cell Allowed

Slab 1	1 - and above Unit

Off Grid Spvpp Cap 30000w 800ah 240v With T-gel Battery Bank Only 02v Cell Allowed

Slab 1	1 - and above Unit

Off Grid Spvpp Cap 40000w 1000ah 240v With T-gel Battery Bank Only 02v Cell Allowed

Slab 1	1 - and above Unit

Off Grid Spvpp Cap 45000w 1000ah 240v With T-gel Battery Bank Only 02v Cell Allowed

Slab 1	1 - and above Unit

Off Grid Spvpp Cap 50000w 1000ah 240v With T-gel Battery Bank Only 02v Cell Allowed

Slab 1	1 - and above Unit

Roof Top Mounted Hot Dip Galvanized Mms 80 Mic Per Kg

Slab 1	1 - and above Unit

Parking Shed Type Galvanized Mms 80 Mic Per Kg

Slab 1	1 - and above Unit

(a). जेम की शर्तों के अनुसार ईएमडी छूट के इच्छुक बिडर को संबंधित केटेगरी के लिए बिड के साथ वैध समर्थित दस्तावेज़ प्रस्तुत करने है। एमएसई केटेगरी के अंतर्गत केवल वस्तुओं के लिए विनिर्माता तथा सेवाओं के लिए सेवा प्रदाता ईएमडी से छूट के पात्र हैं। व्यापारियों को इस नीति के दायरे से बाहर रखा गया है।/EMD EXEMPTION: The bidder seeking EMD exemption, must submit the valid supporting document for the relevant category as per GeM GTC with the bid. Under MSE category, only manufacturers for goods and Service Providers for Services are eligible for exemption from EMD. Traders are excluded from the purview of this Policy.

(b).ईएमडी और संपादन जमानत राशि, जहां यह लागू होती है, लाभार्थी के पक्ष में होनी चाहिए। / EMD should be in favour of Beneficiary, wherever it is applicable.

(c).ईएमडी और संपादन जमानत राशि लाभार्थी के पक्ष में होनी चाहिए। / Earnest Money Deposit (EMD) shall also be accepted by the buyer in the form of a surety bond.

लाभार्थी /Beneficiary :
CREDA
Raipur, Energy Department Chhattisgarh, Chhattisgarh State Renewable Energy Development Agency (CREDA),
(Creda Raipur)

बोली विभाजन लागू नहीं किया गया/Bid splitting not applied.

1. If the bidder is a DPIIT registered Startup, the bidder shall be relaxed from the the eligibility criteria of "Experience Criteria" as defined above subject to their meeting of quality and technical specifications. The bidder seeking Relaxation from Experience Criteria, shall upload the supporting documents to prove his eligibility for Relaxation.
2. If the bidder is a DPIIT registered Startup, the bidder shall be relaxed from the the eligibility criteria of "Bidder Turnover" as defined above subject to their meeting of quality and technical specifications. If the bidder is DPIIT Registered OEM of the offered products, it would be relaxed from the "OEM Average Turnover" criteria also subject to meeting of quality and technical specifications. The bidder seeking Relaxation from Turnover shall upload the supporting documents to prove his eligibility for Relaxation.
3. The minimum average annual financial turnover of the bidder during the last three years, ending on 31st March of the previous financial year, should be as indicated above in the bid document. Documentary evidence in the form of certified Audited Balance Sheets of relevant periods or a certificate from the Chartered Accountant / Cost Accountant indicating the turnover details for the relevant period shall be uploaded with the bid. In case the date of constitution / incorporation of the bidder is less than 3-year-old, the average turnover in respect of the completed financial years after the date of constitution shall be taken into account for this criteria.
4. Experience Criteria: In respect of the filter applied for experience criteria, the Bidder or its OEM of the product offered in the bid {themselves or through reseller(s)} should have regularly, manufactured and supplied same or similar Category Products to any Central / State Govt Organization / PSU for number of Financial years as indicated above in the bid document before the bid opening date. Copies of relevant contracts and delivery acceptance certificates like CRAC to be submitted along with bid in support of having supplied some quantity during each of the Financial year. In case of bunch bids, the category of primary product having highest value should meet this criterion.
5. Estimated Bid Value indicated above is being declared solely for the purpose of guidance on EMD amount and for determining the Eligibility Criteria related to Turn Over, Past Performance and Project / Past Experience etc. This has no relevance or bearing on the price to be quoted by the bidders and is also not going to have any impact on bid participation. Also this is not going to be used as a criteria in determining reasonableness of quoted prices which would be determined by the buyer based on its own assessment of reasonableness and based on competitive prices received in Bid / RA process.

Pre Bid Detail(s)

मूल्य भिन्नता खंड दस्तावेज़/**Pre-Bid Date and Time**	प्री-बिड स्थान/**Pre-Bid Venue**
07-08-2026 15:00:00	CREDA HEAD OFFICE RAIPUR

मूल्यांकन विधि(मदवार मूल्यांकन विधि) / **Evaluation Method & Consignee Location** (Item Wise Consignee Wise

Evaluation Method)

Contract will be awarded schedule wise and the determination of L1 will be done separately for each schedule. The details of item-consignee combination covered under each schedule are as under:

मूल्यांकन अनुसूचियां / **Evaluation Schedules**	वस्तु/श्रेणी / **Item/Category**	**Location of Consignee**
Schedule 1 (RAIPUR)	Off Grid Spvpp Cap 1000w 150ah 48v With Lmla Battery Bank 12v Cell Allowed	RAIPUR
Schedule 2 (RAIPUR)	Off Grid Spvpp Cap 2000w 300ah 48v With Lmla Battery Bank Only 02v Cell Allowed	RAIPUR
Schedule 3 (RAIPUR)	Off Grid Spvpp Cap 3000w 400ah 48v With Lmla Battery Bank Only 02v Cell Allowed	RAIPUR
Schedule 4 (RAIPUR)	Off Grid Spvpp Cap 4000w 400ah 96v With Lmla Battery Bank Only 02v Cell Allowed	RAIPUR
Schedule 5 (RAIPUR)	Off Grid Spvpp Cap 6000w 400ah 96v With Lmla Battery Bank Only 02v Cell Allowed	RAIPUR
Schedule 6 (RAIPUR)	Off Grid Spvpp Cap 8000w 400ah 120v With Lmla Battery Bank Only 02v Cell Allowed	RAIPUR
Schedule 7 (RAIPUR)	Off Grid Spvpp Cap 10000w 300ah 240v With Lmla Battery Bank Only 02v Cell Allowed	RAIPUR
Schedule 8 (RAIPUR)	Off Grid Spvpp Cap 15000w 400ah 240v With Lmla Battery Bank Only 02v Cell Allowed	RAIPUR
Schedule 9 (RAIPUR)	Off Grid Spvpp Cap 20000w 600ah 240v With Lmla Battery Bank Only 02v Cell Allowed	RAIPUR
Schedule 10 (RAIPUR)	Off Grid Spvpp Cap 25000w 600ah 240v With Lmla Battery Bank Only 02v Cell Allowed	RAIPUR
Schedule 11 (RAIPUR)	Off Grid Spvpp Cap 30000w 800ah 240v With Lmla Battery Bank Only 02v Cell Allowed	RAIPUR
Schedule 12 (RAIPUR)	Off Grid Spvpp Cap 40000w 1000ah 240v With Lmla Battery Bank Only 02v Cell Allowed	RAIPUR
Schedule 13 (RAIPUR)	Off Grid Spvpp Cap 45000w 1000ah 240v With Lmla Battery Bank Only 02v Cell Allowed	RAIPUR
Schedule 14 (RAIPUR)	Off Grid Spvpp Cap 50000w 1000ah 240v With Lmla Battery Bank Only 02v Cell Allowed	RAIPUR
Schedule 15 (RAIPUR)	Off Grid Spvpp Cap 1000w 150ah 48v With T-gel Battery Bank 12v Cell Allowed	RAIPUR
Schedule 16 (RAIPUR)	Off Grid Spvpp Cap 2000w 300ah 48v With T-gel Battery Bank Only 02v Cell Allowed	RAIPUR
Schedule 17 (RAIPUR)	Off Grid Spvpp Cap 3000w 400ah 48v With T-gel Battery Bank Only 02v Cell Allowed	RAIPUR
Schedule 18 (RAIPUR)	Off Grid Spvpp Cap 4000w 400ah 96v With T-gel Battery Bank Only 02v Cell Allowed	RAIPUR
Schedule 19 (RAIPUR)	Off Grid Spvpp Cap 6000w 400ah 96v With T-gel Battery Bank Only 02v Cell Allowed	RAIPUR
Schedule 20 (RAIPUR)	Off Grid Spvpp Cap 8000w 400ah 120v With T-gel Battery Bank Only 02v Cell Allowed	RAIPUR

Schedule 21 (RAIPUR)	Off Grid Spvpp Cap 10000w 300ah 240v With T-gel Battery Bank Only 02v Cell Allowed	RAIPUR
Schedule 22 (RAIPUR)	Off Grid Spvpp Cap 15000w 400ah 240v With T-gel Battery Bank Only 02v Cell Allowed	RAIPUR
Schedule 23 (RAIPUR)	Off Grid Spvpp Cap 20000w 600ah 240v With T-gelbattery Bank Only 02v Cell Allowed	RAIPUR
Schedule 24 (RAIPUR)	Off Grid Spvpp Cap 25000w 600ah 240v With T-gel Battery Bank Only 02v Cell Allowed	RAIPUR
Schedule 25 (RAIPUR)	Off Grid Spvpp Cap 30000w 800ah 240v With T-gel Battery Bank Only 02v Cell Allowed	RAIPUR
Schedule 26 (RAIPUR)	Off Grid Spvpp Cap 40000w 1000ah 240v With T-gel Battery Bank Only 02v Cell Allowed	RAIPUR
Schedule 27 (RAIPUR)	Off Grid Spvpp Cap 45000w 1000ah 240v With T-gel Battery Bank Only 02v Cell Allowed	RAIPUR
Schedule 28 (RAIPUR)	Off Grid Spvpp Cap 50000w 1000ah 240v With T-gel Battery Bank Only 02v Cell Allowed	RAIPUR
Schedule 29 (RAIPUR)	Roof Top Mounted Hot Dip Galvanized Mms 80 Mic Per Kg	RAIPUR
Schedule 30 (RAIPUR)	Parking Shed Type Galvanized Mms 80 Mic Per Kg	RAIPUR

Off Grid SPVPP Cap 1000W 150AH 48V With LMLA Battery Bank 12V Cell Allowed

तकनीकी विशिष्टियाँ /Technical Specifications

Specification Document	View File
BOQ Detail Document	View File

Advisory-Please refer attached BOQ document for detailed consignee list and delivery period.

Off Grid SPVPP Cap 2000W 300AH 48V With LMLA Battery Bank Only 02V Cell Allowed

तकनीकी विशिष्टियाँ /Technical Specifications

Specification Document	View File
BOQ Detail Document	View File

Advisory-Please refer attached BOQ document for detailed consignee list and delivery period.

Off Grid SPVPP Cap 3000W 400AH 48V With LMLA Battery Bank Only 02V Cell Allowed

तकनीकी विशिष्टियाँ /Technical Specifications

Specification Document	View File
BOQ Detail Document	View File

Advisory-Please refer attached BOQ document for detailed consignee list and delivery period.

Off Grid SPVPP Cap 4000W 400AH 96V With LMLA Battery Bank Only 02V Cell Allowed

तकनीकी विशिष्टियाँ /Technical Specifications

Specification Document	View File
BOQ Detail Document	View File

Advisory-Please refer attached BOQ document for detailed consignee list and delivery period.

Off Grid SPVPP Cap 6000W 400AH 96V With LMLA Battery Bank Only 02V Cell Allowed

तकनीकी विशिष्टियाँ /Technical Specifications

Specification Document	View File
BOQ Detail Document	View File

Advisory-Please refer attached BOQ document for detailed consignee list and delivery period.

Off Grid SPVPP Cap 8000W 400AH 120V With LMLA Battery Bank Only 02V Cell Allowed

तकनीकी विशिष्टियाँ /Technical Specifications

Specification Document	View File
BOQ Detail Document	View File

Advisory-Please refer attached BOQ document for detailed consignee list and delivery period.

Off Grid SPVPP Cap 10000W 300AH 240V With LMLA Battery Bank Only 02V Cell Allowed

तकनीकी विशिष्टियाँ /Technical Specifications

Specification Document	View File
BOQ Detail Document	View File

Advisory-Please refer attached BOQ document for detailed consignee list and delivery period.

Off Grid SPVPP Cap 15000W 400AH 240V With LMLA Battery Bank Only 02V Cell Allowed

तकनीकी विशिष्टियाँ /Technical Specifications

Specification Document	View File
BOQ Detail Document	View File

Advisory-Please refer attached BOQ document for detailed consignee list and delivery period.

Off Grid SPVPP Cap 20000W 600AH 240V With LMLA Battery Bank Only 02V Cell Allowed

तकनीकी विशिष्टियाँ /Technical Specifications

Specification Document	View File
BOQ Detail Document	View File

Advisory-Please refer attached BOQ document for detailed consignee list and delivery period.

Off Grid SPVPP Cap 25000W 600AH 240V With LMLA Battery Bank Only 02V Cell Allowed

तकनीकी विशिष्टियाँ /Technical Specifications

Specification Document	View File
BOQ Detail Document	View File

Advisory-Please refer attached BOQ document for detailed consignee list and delivery period.

Off Grid SPVPP Cap 30000W 800AH 240V With LMLA Battery Bank Only 02V Cell Allowed

तकनीकी विशिष्टियाँ /Technical Specifications

Specification Document	View File
BOQ Detail Document	View File

Advisory-Please refer attached BOQ document for detailed consignee list and delivery period.

Off Grid SPVPP Cap 40000W 1000AH 240V With LMLA Battery Bank Only 02V Cell Allowed

तकनीकी विशिष्टियाँ /Technical Specifications

Specification Document	View File
BOQ Detail Document	View File

Advisory-Please refer attached BOQ document for detailed consignee list and delivery period.

Off Grid SPVPP Cap 45000W 1000AH 240V With LMLA Battery Bank Only 02V Cell Allowed

तकनीकी विशिष्टियाँ /Technical Specifications

Specification Document	View File
BOQ Detail Document	View File

Advisory-Please refer attached BOQ document for detailed consignee list and delivery period.

Off Grid SPVPP Cap 50000W 1000AH 240V With LMLA Battery Bank Only 02V Cell Allowed

तकनीकी विशिष्टियाँ /Technical Specifications

Specification Document	View File
BOQ Detail Document	View File

Advisory-Please refer attached BOQ document for detailed consignee list and delivery period.

Off Grid SPVPP Cap 1000W 150AH 48V With T-Gel Battery Bank 12V Cell Allowed

तकनीकी विशिष्टियाँ /Technical Specifications

Specification Document	View File
BOQ Detail Document	View File

Advisory-Please refer attached BOQ document for detailed consignee list and delivery period.

Off Grid SPVPP Cap 2000W 300AH 48V With T-Gel Battery Bank Only 02V Cell Allowed

तकनीकी विशिष्टियाँ /Technical Specifications

Specification Document	View File
BOQ Detail Document	View File

Advisory-Please refer attached BOQ document for detailed consignee list and delivery period.

Off Grid SPVPP Cap 3000W 400AH 48V With T-Gel Battery Bank Only 02V Cell Allowed

तकनीकी विशिष्टियाँ /Technical Specifications

Specification Document	View File
BOQ Detail Document	View File

Advisory-Please refer attached BOQ document for detailed consignee list and delivery period.

Off Grid SPVPP Cap 4000W 400AH 96V With T-Gel Battery Bank Only 02V Cell Allowed

तकनीकी विशिष्टियाँ /Technical Specifications

Specification Document	View File
BOQ Detail Document	View File

Advisory-Please refer attached BOQ document for detailed consignee list and delivery period.

Off Grid SPVPP Cap 6000W 400AH 96V With T-Gel Battery Bank Only 02V Cell Allowed

तकनीकी विशिष्टियाँ /Technical Specifications

Specification Document	View File
BOQ Detail Document	View File

Advisory-Please refer attached BOQ document for detailed consignee list and delivery period.

Off Grid SPVPP Cap 8000W 400AH 120V With T-Gel Battery Bank Only 02V Cell Allowed

तकनीकी विशिष्टियाँ /Technical Specifications

Specification Document	View File
BOQ Detail Document	View File

Advisory-Please refer attached BOQ document for detailed consignee list and delivery period.

Off Grid SPVPP Cap 10000W 300AH 240V With T-Gel Battery Bank Only 02V Cell Allowed

तकनीकी विशिष्टियाँ /Technical Specifications

Specification Document	View File
BOQ Detail Document	View File

Advisory-Please refer attached BOQ document for detailed consignee list and delivery period.

Off Grid SPVPP Cap 15000W 400AH 240V With T-Gel Battery Bank Only 02V Cell Allowed

तकनीकी विशिष्टियाँ /Technical Specifications

Specification Document	View File
BOQ Detail Document	View File

Advisory-Please refer attached BOQ document for detailed consignee list and delivery period.

Off Grid SPVPP Cap 20000W 600AH 240V With T-Gelbattery Bank Only 02V Cell Allowed

तकनीकी विशिष्टियाँ /Technical Specifications

Specification Document	View File
BOQ Detail Document	View File

Advisory-Please refer attached BOQ document for detailed consignee list and delivery period.

Off Grid SPVPP Cap 25000W 600AH 240V With T-Gel Battery Bank Only 02V Cell Allowed

तकनीकी विशिष्टियाँ /Technical Specifications

Specification Document	View File
BOQ Detail Document	View File

Advisory-Please refer attached BOQ document for detailed consignee list and delivery period.

Off Grid SPVPP Cap 30000W 800AH 240V With T-Gel Battery Bank Only 02V Cell Allowed

तकनीकी विशिष्टियाँ /Technical Specifications

Specification Document	View File
BOQ Detail Document	View File

Advisory-Please refer attached BOQ document for detailed consignee list and delivery period.

Off Grid SPVPP Cap 40000W 1000AH 240V With T-Gel Battery Bank Only 02V Cell Allowed

तकनीकी विशिष्टियाँ /Technical Specifications

Specification Document	View File
BOQ Detail Document	View File

Advisory-Please refer attached BOQ document for detailed consignee list and delivery period.

Off Grid SPVPP Cap 45000W 1000AH 240V With T-Gel Battery Bank Only 02V Cell Allowed

तकनीकी विशिष्टियाँ /Technical Specifications

Specification Document	View File
BOQ Detail Document	View File

Advisory-Please refer attached BOQ document for detailed consignee list and delivery period.

Off Grid SPVPP Cap 50000W 1000AH 240V With T-Gel Battery Bank Only 02V Cell Allowed

तकनीकी विशिष्टियाँ /Technical Specifications

Specification Document	View File
BOQ Detail Document	View File

Advisory-Please refer attached BOQ document for detailed consignee list and delivery period.

Roof Top Mounted Hot Dip Galvanized MMS 80 MIC Per Kg

तकनीकी विशिष्टियाँ /Technical Specifications

Specification Document	View File
BOQ Detail Document	View File

Advisory-Please refer attached BOQ document for detailed consignee list and delivery period.

Parking Shed Type Galvanized MMS 80 MIC Per Kg

तकनीकी विशिष्टियाँ /Technical Specifications

Specification Document	View File
BOQ Detail Document	View File

Advisory-Please refer attached BOQ document for detailed consignee list and delivery period.

क्रेता द्वारा जोड़ी गई बिड की विशेष शर्तें/Buyer Added Bid Specific Terms and Conditions

1. **Buyer Added Bid Specific ATC**

   Buyer uploaded ATC document Click here to view the file.

अस्वीकरण/Disclaimer

The Additional Terms and Conditions (ATC) have been incorporated by the Buyer after approval of their Competent Authority. The Buyer ,is solely responsible for the impact of these clauses on the bidding process, its outcome, and consequences thereof including any restriction arising in the bidding process due to these ATCs and including the modification of technical specifications and / or terms and conditions governing the bid.All representations / grievances pertaining to the ATC clauses shall be raised with the buyer organization directly and not with GeM.If any of the clause(s) is/are incorporated by the Buyer regarding the following, the bid & resultant contract shall be treated as null & void. Further, GeM reserves the right, at its sole discretion, to cancel the bid forthwith, without issuance of any prior notice or intimation :-

1. Publishing Custom / BOQ bids for items for which regular GeM categories are available (unless such Custom / BOQ item is bunched with the major regular product Category Item).
2. Mandating procurement of / from specific Brand / Make / Model / Manufacturer / Dealer except in case of Single Bid / Proprietary Article Certificate (PAC) Buying.
3. Inclusion of disqualification criteria related to suspension of seller / service provider, where such suspension period has already expired.
4. Mandating submission of documents in physical form as a pre-requisite to qualify bidders.
5. Publishing bids on GeM for procurement of works.

6. Procurement of Goods by creating a Service bid on GeM & vice-versa.
7. Seeking sample with bid or approval of samples during bid evaluation process. However, trial / sample, as the case may be, shall be permitted in cases where trial / sample are allowed as per approved and published procurement policy of the Buyers' controlling Ministry / Department / State / Public Sector Enterprises Headquarters. If there is any violation of trial / sample clause with regard to approved policy of the Buyers' Ministry / Department / State / Public Sector Enterprises Headquarters, then this is to be determined and redressed by the concerned Buyer Organisation only.
8. Seeking experience from specific organization / department / institute only or from foreign / export experience.
9. Creating bid for items from incorrect categories.
10. Reference of conditions published on any external site or reference to external documents/clauses.
11. Asking for any Tender fee / Bid Participation fee, as the case may be.
12. Buyer added ATC Clauses which are in contravention of clauses defined in bid detail section, including specifications, EMD Detail, ePBG Detail and MII and MSE Purchase Preference sections of the bid, unless otherwise allowed by the applicable GeM GTC.
13. Any ATC clause in contravention with GeM GTC Clause 4 (xiii) (h) will be invalid. In case of multiple L1 bidders against a service bid, the buyer shall place the Contract by selection of a bidder amongst the L-1 bidders through a Random Algorithm executed by GeM system.
14. In a category based bid, adding additional items, through buyer added, additional scope of work/ additional terms and conditions/or any other document. If buyer needs more items along with the main item, the same must be added through bunching category based items or by bunching custom catalogues or bunching a BoQ with the main category based item, the same must not be done through ATC or Scope of Work.

Further, if any seller has any objection/grievance against these additional clauses or otherwise on any aspect of this bid, they can raise their representation against the same by using the Representation window provided in the bid details field in Seller dashboard after logging in as a seller. Buyer is duty bound to reply to all such representations and would not be allowed to open bids if he fails to reply to such representations.

All GeM Sellers/Service Providers shall ensure full compliance with all applicable labour laws, including the provisions, rules, schemes and guidelines under the four Labour Codes i.e. the Code on Wages, 2019; the Industrial Relations Code, 2020; the Occupational Safety, Health and Working Conditions Code, 2020; and the Code on Social Security, 2020 as and when notified and brought into force by the Government of India.

For all provisions of the Labour Codes that are pending operationalisation through rules, schemes or notifications, the corresponding provisions of the pre-existing labour enactments (such as The Minimum Wages Act, 1948, The Payment of Wages Act, 1936, The Payment of Bonus Act, 1965, The Equal Remuneration Act, 1976, The Payment of Gratuity Act, 1972, etc. and relevant State Rules) shall continue to remain applicable.

The Seller/ Service Providers shall, therefore, be responsible for ensuring compliance under:

- **All notified and enforceable provisions of the new Labour Codes as mentioned hereinabove; and**
- **All operative provisions of the erstwhile Labour Laws until their complete substitution.**

All obligations relating to wages, social security, safety, working conditions, industrial relations etc. and any other statutory requirements shall be strictly met by the Seller/ Service Provider. Any non-compliance shall constitute a breach of the contract and shall entitle the Buyer to take appropriate action in accordance with the contract and applicable law.

This Bid is governed by the General Terms and Conditions, conditions stipulated in Bid and Service Level Agreement specific to the Service, as the case may be, as provided in the Marketplace.

However, in case of Service, if any condition specified in General Terms and Conditions is contradicted by the conditions stipulated in Service Level Agreement specific to said Service, then it will over-ride the conditions in the General Terms and Conditions.

यह बिड सामान्य शर्तों के अंतर्गत भी शासित है /This Bid is also governed by the General Terms and Conditions

जेम की सामान्य शर्तों के खंड 26 के संदर्भ में भारत के साथ भूमि सीमा साझा करने वाले देश के बिडर से खरीद पर प्रतिबंध के संबंध में भारत के साथ भूमि सीमा साझा करने वाले देश का कोई भी बिडर इस निविदा में बिड देने के लिए तभी पात्र होगा जब वह बिड देने वाला सक्षम प्राधिकारी के पास पंजीकृत हो।बिड में भाग लेते समय बिडर को इसका अनुपालन करना होगा और कोई भी गलत घोषणा किए जाने व इसका अनुपालन न करने पर अनुबंध को तत्काल समाप्त करने और कानून के अनुसार आगे की कानूनी कार्रवाई का आधार होगा।/In terms of GeM GTC clause 26 regarding Restrictions on procurement from a bidder of a country which shares a land border with India, any bidder from a country which shares a land border with India will be eligible to bid in this tender only if the bidder is registered with the Competent Authority. While participating in bid, Bidder has to undertake compliance of this and any false declaration and non-compliance of this would be a ground for immediate termination of the contract and further legal action in accordance with the laws.

---धन्यवाद/Thank You---

Chhattisgarh State Renewable Energy Development Agency (CREDA)

(Dept. of Energy, Govt. of Chhattisgarh)

Near Energy Education Park, Village Fundhar
VIP (Air Port Road) Raipur 492015 (C.G.)
Phone (No.) : +91-7587455652
E-mail: credatendercell@gmail.com, Website: www.creda.co.in

E-BID DOCUMENT No. 5363/CREDA/SPVPP/2026-27 Dated: 31-07-2026

E-TENDER FOR STANDARDIZATION OF RATES FOR SUPPLY, INSTALLATION AND COMMISSIONING OF SOLAR PHOTO VOLTAIC POWER PLANT OF VARIOUS CAPACITY WITH LMLA & T-GEL BATTERY BANK WITH OFF-GRID PCU WITH FIVE YEARS CMC, ON SITE WARRANTEE ANYWHERE IN THE STATE OF CHHATTISGARH THROUGH GEM PORTAL.

Particulars	From Date & Time	To Date & Time	Place
Date of issue of notice inviting bid	31.07.2026 05:00 PM	-----	-----
Period of availability of bidding document at website	31.07.2026 05:00 PM	20.08.2026 05:00 PM	https:// gem.gov.in www.creda.co.in
Submission of Pre- Bid queries in writing	31.07.2026 05:00 PM	06.08.2026 05:00 PM	Pre- Bid queries can be emailed on credatendercell@gmail.com or to be Submitted hard copy at CREDA HO, Raipur
Pre bid meeting	07.08.2026 11:00 AM	07.08.2026 01:00 PM	At CREDA H.O., Conference Hall, Raipur
Display of Sample	13.08.2026 12:00PM	13.08.2026 02:00PM	At CREDA H.O. Raipur
Submission of Online Bid (Technical + e Price Bid) and submission of Documents in hard copy	31.07.2026 05:00 PM	20.08.2026 05:00 PM	Online bid on https:// gem.gov.in and hard copy at H.O. CREDA Raipur (C.G.),
Opening of Technical Bid	21.08.2026 03:00 PM Onwards		At CREDA H.O., Conference Hall, Raipur. (https:// gem.gov.in)
Evaluation of technical bid	24.08.2026 12:00 PM Onwards		At CREDA H.O., Conference Hall, Raipur.
Opening of e- Price Bid	31.08.2026 12:00 PM Onwards		At CREDA H.O., Conference Hall, Raipur. (https:// gem.gov.in)

EMD-Rs. 10,00,000.00 (in words Ten Lacs) for Individual & Consortium bidders and Rs. 2,00,000.00 (in words Two Lacs) for New Entrepreneur bidders to be deposited in CREDA's account via Demand Draft/Pay Order or RTGS/ NEFT.

Document can be downloaded from Gem portal i.e. https://gem.gov.in. For submission of Bid on GeM portal, please refer to the instructions on GeM portal.

CHATTISGARH STATE RENEWABLE ENERGY DEVELOPMENT AGENCY

CONTENTS

Section	Description	Page No.
	Cover Page, Contents etc.	1-3
	Notice Inviting BID	4-5
	Check List	6
	Details of EMD	7
	Undertaking of the Bidder	8
SECTION - 1	Instruction For Bidder	9
	Eligibility Criteria	9-10
	Consortium/Start-Up/New Entrepreneur	10-12
	Bidding Process/EMD/Submission of Documents/Specific /Amendments/GST&TIN/ The Bid/ Analysis of Rate	13-14
	Registration of Bidder/Validity/Terms & Conditions	14-15
	CREDA reserves the right/ Communications/ Pre-bid Queries submission /Technical Criteria/Forfeiture of EMD/CMC/Samples/ Jurisdiction of the court ETC.	15-17
SECTION - 2	General Condition of Contract	18
	Definitions/Proof of Manufacturer/Contract Document/Manner	18-19
	Variations, Additions & Omissions/	19
	Inspection/Completion of work/Eligible SI Default Liability/Force Majeure/Rejection of works/Extension of time/Makes of Equipment.	20-21
	Warrantee Period/ COMC	22
	Terms of Payment/ Penalty for delay in Completion/ Security Deposit/ Insurance	23
	Bid Evaluation Criteria/Evaluation of Price	24-25
	Bid/Allocation of Target/ Bid Rejection	
SECTION - 3	Scope of Work	26-27
SECTION - 4	General Technical Specification:	28-42
	Minimum Technical Requirements/Standards	28
	Modules	29
	Battery	30-33
	PCU	34
	Balance of System (BOS) Items/Components	35
	Module Mounting Structure	36-37
	Battery Trolley Rack/ Electrical connection/ Junction Boxes	37-38
	Lightning and Over voltage protection/Surge protection device	38
	Earthing Protection/ DCDB/ACDC/ Danger Boards/Cables/Wire	39-39
	Junction Boxes/Tool Kit	40
	Data Acquisition System / Plant Monitoring/Other Features	40-41
	Installation of System/Electric Cable/ Warranty/ Traceability of the Product to be Supplied/ Specifications of Elevated Structure	41-42
	Warranty and Maintenance	43-44

Section	Description	Page No.
SECTION - 5	Annexure, Specification, Forms	43-112
	Annexure-I : Certificate of completion	43
	Annexure-II : Consortium Agreement	44-45
	Annexure –III - Format for Affidavit (Declaration of Conflict of Interest)	46-47
	Annexure – IV - Drawing	47-90
	Annexure – V - Technical Bid	91
	Annexure – VI – e-Price Bid	92-96
	Annexure – IV - Logo for Module	97
	Annexure-VIII: Draft Agreement	98-101
	Annexure-IX: Declaration for using same make of equipment's as per the test certificate	102
	Annexure-X: CERTIFICATE OF QUARTERLY VISITS.	103
	Schedule – I: PART A: GENERAL INFORMATION	104
	Schedule – II : PART B : COMMERCIAL INFORMATION	105
	Schedule – III : PART C : TECHNICAL INFORMATION	106
	Schedule – IV : TECHNICAL DEVIATIONS	107
	Site Clearance Certificate	108-119
	Additional Terms & Condition	110

NIT Ref. No. 5364/CREDA/SPV-PP/2026-27 Date: 31-07-2026

NOTICE INVITING TENDER

CREDA invites online bid for standardization of rates for Supply, Installation, and Commissioning of Solar Photovoltaic power plant with LMLA & T-GEL battery bank with off-grid PCU with complete system warranty, CMC, insurance and its repair and maintenance for 05 Year for anywhere in the State of Chhattisgarh from registered System integrators of CREDA for SPV systems with 3 years successful track record in Solar photovoltaic power plants systems, as per following details-

Sl. No.	Item Description	Approximate Quantity	EMD	Essentials
1.	SPV-PP with LMLA battery bank of various capacity	1000	Rs. 10,00,000/- (Rs. 2,00,000/- for New Entrepreneur)	As per clause no.1a to 1g of Eligibility Criteria (**Page no.09-10**)
2.	SPV-PP with T-Gel battery bank of various capacity			
TOTAL		**1000**		

The quantity of Solar Power Plants Mentioned in above table is based on target/ work that are expected to be given by various agencies to CREDA within the period of one year. The quantity may change as per field requirement and fund availability.

Estimated Value of tender: - Rs. 100 Crores.

Important Events and time schedule for this Bid are as follows –

Particulars	From Date & Time	To Date & Time	Place
Date of issue of notice inviting bid	**31.07.2026 05:00 PM**	-----	-----
Period of availability of bidding document at website	**31.07.2026 05:00 PM**	**20.08.2026 05:00 PM**	https:// gem.gov.in www.creda.co.in
Submission of Pre- Bid queries in writing	**31.07.2026 05:00 PM**	**06.08.2026 05:00 PM**	Pre- Bid queries can be emailed on credatendercell@gmail.com or to be Submitted hard copy at CREDA HO, Raipur
Pre bid meeting	**07.08.2026 11:00 AM**	**07.08.2026 01:00 PM**	At CREDA H.O., Conference Hall, Raipur
Display of Sample	**13.08.2026 12:00PM**	**13.08.2026 02:00PM**	At CREDA H.O. Raipur
Submission of Online Bid (Technical + e Price Bid) and submission of Documents in hard copy	**31.07.2026 05:00 PM**	**20.08.2026 05:00 PM**	Online bid on https:// gem.gov.in and hard copy at H.O. CREDA Raipur (C.G.),
Opening of Technical Bid	**21.08.2026 03:00 PM Onwards**		At CREDA H.O., Conference Hall, Raipur. (https:// gem.gov.in)
Evaluation of technical bid	**24.08.2026 12:00 PM Onwards**		At CREDA H.O., Conference Hall, Raipur.
Opening of e- Price Bid	**31.08.2026 12:00 PM Onwards**		At CREDA H.O., Conference Hall, Raipur. (https:// gem.gov.in)

Technical Bid and Price Bid shall be submitted online only at https:// gem.gov.in. However Technical Bid (as per the checklist) also has to be submitted in hard copy duly signed by bidder at Tender Cell, H.O., CREDA. If there is any discrepancy in the e-Bid and hard copy, only the e-bid shall be valid. **In no case the hard copy of documents shall be evaluated, it is only for record keeping of CREDA**. Bidders are advised to follow the instructions provided for registration and e-Submission process accordingly.

(For any query about e-bidding please visit user manual at https:// gem.gov.in) Details of this tender are mentioned at Tender Documents which can be downloaded from our website www.creda.co.in.

The Bidder shall have to deposit EMD as mentioned above through demand draft/RTGS/NEFT payable to CREDA Raipur while submitting tender.

Bidders are requested to submit their suggestions/objections/reservations, if any with details so as to avoid any confusion and to ensure clarity and transparency regarding the tender in writing or by e-mail. Any Addendum/Corrigendum/Amendment/Cancellation Notice, if needed, shall be uploaded on CREDA's Website.

CREDA reserves all rights to accept/reject any or all tenders in full/part without assigning any reasons thereof.

Chief Engineer
H.O. CREDA, Raipur (CG)

CHECK LIST OF DOCUMENTS TO BE UPLOADED IN THE E-BIDDING PORTAL

To ensure that your Bid uploaded on the GeM portal i.e. www.gem.gov.in is complete in all respects, please go through the following checklist & tick mark for the enclosures attached with your Bid –

S. No.	Envelope	Description of documents to be uploaded in the e-bidding portal	Complied (Yes/ No)	(Page No.)
1.	**A. Pre-Qualification**	EMD submission form of the bidder confirmed by CREDA (as on page – 7)		
2.		Scanned copy of Undertaking of the Bidder as mentioned on Page –8 of the tender document on the letter head of bidder		
3.		Scanned copy of original tender document duly signed & with stamp on each page, as a confirmation of acceptance of the Terms & Conditions (T&C).		
4.		PAN, GSTIN issued in the name of the bidder		
5.		Self-certificate from Bidder on not being a debarred from Government contract or a blacklisted company.		
6.		Declaration of conflict of interest – by bidder about any relatives working with CREDA and Affidavit (**Annexure III) (Hard Copy to be submitted as per Clause 6d, Section – 1)**		
7.		Copy of Registration: Certificate as System Integrator of CREDA in SPV Program.		
8.		Certificate for Startup /MSME (If any)		
9.	**B. Technical and Financial Qualification**	Copy of Approved and valid Test Reports of components of SPVPP in the name of Bidder/Manufacturer as per eligibility criteria clause 1a of section-1.		
10.		Original Net Worth Certificate duly signed by Chartered Accountant as on 31st March 2025/ 31st March 2026.		
11.		Original certificate for last three financial years Turnover i.e. 2022-23, 2023-24, 2024-25/2025-26 of work done in SPV Project.		
12.		Original ITRs for last three financial Years i.e. 2022-23, 2023-24, 2024-25/2025-26 of the bidder. In case the ITR for FY 2025-26 has not yet been finalized or acknowledged, the bidder may submit a provisional copy of the ITR for FY 2025-26.		
13.		Completion Certificates of installation and commissioning of SPV power plants by the Bidder in Govt. Scheme of any state or Market Mode Scheme of CREDA in three financial years (**Annexure I**)		
14.		Proof of being Eligible Manufacturer of SPV Modules/ PCU/Batteries/other BOS (if any)		
15.		Manufacture Authorization certificates of major components of solar power plants.		
16.		Technical Data Sheet for each component showing full technical details.		
17.		Declaration for using same make of equipment's as per the test certificate **(Annexure – IX)**		

Note:- Bidders shall have to also submit the original hard copies of the above mentioned documents.

Details of EMD

Name of A/c	CREDA
Bank & Branch Name	ICICI Bank, Panchpedi Naka, Raipur
Bank Account Number	134601000400
Branch IFSC Code	ICIC0001346

Bid No. and Date		
Name of the Bidder		
Bidder's Bank Account Details		
(i)	Name of the bank	
(ii)	Branch	
(iii)	IFSC Code	
(iv)	Account No.	
(v)	Transaction reference number	EMD - _____
(vi)	Date of transaction	EMD - _____
(vii)	EMD	Rs. ……..…./- In Words (Rs……)

(Sign & Seal of the bidder)

***NOTE –**

1. **The EMD shall have to be deposited as mentioned in the NIT in CREDA's bank account (amount mentioned above). Bidder shall have to upload the transaction details as above or a scanned copy of the DD (if transaction is done through DD)**
2. **In case the transaction is done through DD, the original DD has to be submitted in envelope as per Clause 6(d).**

UNDERTAKING OF THE BIDDER
(To be submitted on letter head)

I/We have read carefully and examined the notice inviting Bid, schedule, General Rules and terms and conditions of the contract, special conditions, Schedule of Rates and other documents and Rules referred to in the Bid document.

I/We hereby tender my rates for the execution of the work for CREDA as specified within the time stipulated in the schedule in accordance with all aspects with the specifications, designs, drawings and instructions with such conditions so far as applicable.

I/We agree to keep the Bid valid for One Hundred Eighty (180) days from the due date of submission thereof and not to make any modifications in its terms and conditions.

A sum of **Rs. Ten Lakhs for Individual and Consortium bidders /Two Lakhs for New Entrepreneur** hereby forwarded as **Earnest Money** in the form of crossed Demand draft/Pay order / RTGS / NEFT payable to CREDA at Raipur (C.G.). If I/We fail to commence or complete the sanction ordered in specified time or fail to fulfill the any condition of Bid document, I/We agree that the CREDA shall, without prejudice to any other right or remedy, be at liberty to forfeit the said Earnest Money absolutely. The said Earnest Money shall be retained by CREDA towards security deposit to execute all the works referred to in the Bid documents upon the terms and conditions contained or referred to therein and to carry out such deviations as may be required by CREDA.

I/We hereby declare that I/We shall treat the Bid documents, specifications and other records connected with the work as secret/confidential and shall not communicate information derived there from to any person other than a person to whom I/We have authorized to communicate the same or use the information in any manner prejudicial to the safety of CREDA/Government.

I/We shall abide to all the laws and shall be responsible for making payments of all the taxes, duties, levies and other Govt. dues etc. to the appropriate Govt. departments.

Our GST Registration No._____.The PAN No. under the Income Tax Act is _____.

I/We shall be responsible for the payment of the respective taxes to the appropriate authorities and should I/we fail to do so, I/we hereby authorize CREDA to recover the taxes due from us and deposit the same with the appropriate authorities on their demand.

I/We declare that none of our relatives is working in CREDA either on Regular/Contract/Placement basis or I/We don't have any partnership/subcontract obligation with any employee working in CREDA at present directly or indirectly and we will not enter in such obligation in future also. If any breach of declaration is found than we will be responsible for our debarment and any other action taken by CREDA.

Dated: **Signature**

Place: **Name of Bidder with seal.....**

Witness:

Signature: .....

Name: .....

Postal Address:

.....

.....

.....

.....

SECTION - 1

INSTRUCTIONS FOR BIDDERS

1. ELIGIBILITY CRITERIA-

a. TEST REPORTS

i. Bidder must have certified copy of original valid test report of major component such as SPV Module, Battery, and PCU cum Inverter in the name of manufacturer. They will have to provide copy of such test report of the integrated systems or their major component from Solar Energy Test Centre or any other test center accredited by Ministry of New & Renewable Energy (MNRE)/ NABL. Bidder must also have to submit certified copy of original test reports of all the major components such as SPV Module, Battery and PCU cum Inverter.

Financial bid of those Bidders will not be opened who have not submitted valid test report.

Bidder should have self-attested copy test certificate for system valid at the time of opening of the bid.

In case, during the execution of the work, if the bidder/SI wishes to change the make of major components (with the same specifications in this bid) such as Solar Modules and/or Battery and/or PCU cum inverter and/or Charge controller, then such bidder/SI shall have to submit the test report of newly proposed configuration to CREDA and only after due approval from CREDA, the bidder can install such system in the field. CREDA reserves the right to allow or disapprove such new configurations as and when they are brought to CREDA's notice by the bidders/SIs.

ii. Bidder shall have to produce copy original test certificate(s) (in addition to the documents submitted in hard copy as per Clause 6(d))for the bidding at the time of opening of technical bid.

b. MINIMUM EXPERIENCE

Bidders must have experience in at least any three of the last consecutive five financial years: 2021-22, 2022-23, 2023-24,2024-25 and 2025-26 as per the details mentioned below–

S. No.	Category	Mandatory Eligibility
1	Category- I (01KW to 10KW)	The bidder must have installed and commissioned at least one system of 02kWp or higher capacity with LMLA/ T-Gel battery bank and total installed cumulative capacity of 100kWp. The minimum capacity of system is restricted to 1kWp for LMLA/T-Gel battery bank for counting of cumulative capacity of 100kWp.
2	Category- II (15KW to 50KW)	The bidder must have installed and commissioned at least one system of 15kWpor higher capacity with LMLA/ T-Gel battery bank and total installed cumulative capacity of 500KW.The minimum capacity of system is restricted to 1kWp for LMLA/T-Gel battery bank for counting of cumulative capacity of 500kWp

Bidders who are bidding for category “II” (LMLA, T-Gel battery Bank) will also be considered for categories I (LMLA, T-Gel battery Bank).

c. Bidders will have to submit experience of certificates containing complete system details only from the concerned state/central agencies/department and PSU’s, document issued by competent authority duly sealed and signed along with bid document. Experience certificate shall be submitted in attached format (as per **Annexure – I**) or other format containing similar information shall be considered only in-case submitted in Hindi / English Language only. At the time of opening of technical bid, bidders shall have to present original reports/certificate as above. Work order, L.O.I. / L.O.A. etc., will not be accepted as a proof of experience.

d. Bidders must have a Positive Net worth **(Positive Net worth means “Net value of the Assets minus(-) Net value of liabilities”)** of minimum **Rs. 50 Lacs for Category "I”, and** minimum **Rs. 01 Crore for Category “II” as** on **31st March 2025/31st March 2026**. They shall have to

submit an **Original CA Certified Certificate** duly signed by a qualified and registered Chartered Accountant having UDI number as a proof. Produced certificate must tally with the audited balance sheet.

e. Bidders should have an aggregate turnover of **Minimum Rs. 05 Crore for Category "I" and Minimum Rs. 10 Crore for Category "II"** in last three consecutive years i.e. 2022-23, 2023-24, 2024-25/2025-26 in SPV Projects. Certified copies of the annual returns and audited balance sheet submitted to the Registrar of Companies/ Income Tax Authorities should be enclosed. For the preceding years an **Original Summarized Sheet** of turnover certified by registered CA must been closed.

f. Bidder who are debarred from business by Govt. /Govt. Agency in any state would not be eligible to participate in this bid. A self-declaration should be submitted by the bidder to this effect, failing which bid shall be rejected.

g. Even though the bidders meet the above qualifying criteria, they are subject to be disqualified if they have:

i. Made misleading or false representations in the forms, statements, affidavits and attachments submitted in proof of the qualification requirements; and/or

ii. Record of poor performance such as abandoning the works, not properly completing the contract, inordinate delays in completion litigation history, or financial failures etc; and/or

iii. Participated in the previous bidding for the same work and had quoted unreasonably high or low bid prices and could not furnish rational justification for it to CREDA.

2. CONSORTIUM-

There can be consortium for the contract bid in the constituent firm indicating clearly, amongst other things, the proposed distribution of responsibilities, both financial as well as technical for execution of the work amongst them. For the purpose of this clause the most experienced partner shall be the lead partner. The copy of the consortium agreement in accordance with the requirements mention in **Annexure II**. Lead partner shall be nominated as being partner-in- charge and this authorization shall be evidenced by submitting a Power of Attorney signed by second partner. Consortium shall be allowed in this tender up to two partners submitted to fulfilling following criteria:-

a. The term Bidder used hereinafter would therefore apply to both as single entity and as Consortium. Consortium of companies/organizations/bidders (maximum of two members).

b. Consortium partners will have to open ESCROW bank account. Payment will be given in same account or lead partner bank account.

c. Most experienced partners of the consortium shall act as Lead member.

d. Both the partners should individually fulfil criteria of 1(f) and 1(g).

e. Both the partners should jointly fulfil eligibility criteria as per clause 1(a), 1(b), 1(c), 1(d) and 1(e). In case of minimum experience as per clause 1(b), incorporation of the Lead Member in the Consortium shall determine the minimum experience required for the Consortium to qualify.

f. Member of any Consortium Firm shall not be permitted to participate either in individual capacity or as a member of any other Consortium in the same tender. Submission or participation in more than one bid will cause disqualification of the entire bid submitted by the bidder.

g. All formalities including signing the agreement in respect of submission of tender shall be done only in the name of **'Lead Member'** and not in the name of Joint Consortium. However, name & other details of both the members of Consortium firm should be clearly mentioned in the bid.

h. Any one partner of consortium preferably lead partner shall mandatorily have minimum 03 (three) years installation experience of Solar Power Plant systems.

i. The lead partner of consortium shall be solely responsible for any liability, penalty, insurance, CMC and other terms and conditions mentioned in this Tender Document. In event of default by any partner in the execution of his part of contract, both the partners shall be debarred form the tender, execution of work and empanelment list of CREDA.

j. Notwithstanding the permission to assigning the responsibilities of defaulting partner above, both the partner of consortium will retain the full and undivided responsibility for the performance of their obligation under the bid.

k. Both the partner shall be registered in CREDA. Otherwise, consortium bid/bidders shall be disqualified.

l. The bid submitted shall include all the relevant information mentioned in this tender document applicable to consortium partner shall be furnished separately for each partner like affidavit as in

Annexure-III mentioning information of relatives, Experience certificate, Schedule- I,II,III,IV etc. In case of fails to do, bid shall be rejected.

m. A copy of Memorandum of Understanding (MoU) executed between the members of Consortium shall be submitted along with the tender. The complete details of the members of the Joint Venture Firm, their share and responsibility in the Consortium etc. Particularly with reference to financial, technical and other obligations shall be furnished in the MoU.

n. Once the bid is submitted, the MoU shall not be modified /altered/ terminated during the period of execution including any extension thereafter by CREDA or validity of any letter of award awarded to the said Consortium Firm. In case, the Bidder fails to observe/comply with this stipulation, the full Security Deposit shall be liable to be forfeited.

o. A duly notarized agreement on 100 Rupees stamp paper of JV/Consortium Firm shall be executed between the 'Lead Member' and Consortium/JV Partner. This Agreement should be submitted in original with your bid. **(Annexure – II)**

p. 'Lead Member' of the JV firm shall be authorized on behalf of Joint Venture firm to deal with CREDA, sign the agreement and enter into contract in respect of the said tender, such activities in respect of the said tender/contract. All notices/correspondences with respect to the contract would be sent only to this 'Lead Member' of Joint Venture Firm.

q. **Copy of the original Memorandum of Understanding (MoU) as stated in clause 2(m) and original copy of agreement as stated in clause 2(o) shall be submitted separately. In absence of any of each shall lead to disqualification from the bid.**

r. Duration of MoU and Consortium Agreement shall be valid during the entire execution period/validity of letter of award and any extension thereafter/currency of the contract including the period of extension, if any.

s. Any change/modification in constitution of Consortium Firm shall not be allowed. Members of the consortium are not allowed to enter into separate consortium(s) with other Companies/ organizations/bidders to participate in other bids of CREDA as long as this bid is valid.

t. Splitting of EMD/fees among the members of Consortium shall not be permitted.

u. Members of the Consortium Firm shall be jointly and severally liable to CREDA for execution of the project/ Work/ Assignment etc. The Consortium members shall also be liable jointly and severally for the loss, damages caused to the CREDA during the course of execution of any awarded contract or due to non-execution of the contract or part thereof. Governing Laws for Consortium firm: Consortium Agreement in all respect be governed by and interpreted in accordance with Indian Laws.

v. After successful completion of work, experience certificate shall be given by CREDA in accordance with percentage of participation as mentioned in consortium agreement.

All correspondence by CREDA shall be done with the 'Lead member' of JV/Consortium only

3. START-UP/MSME AND NEW ENTREPRENEUR-

a. CREDA may consider awarding work of installation up to **05 nos. Solar Power Plant Systems up to cumulative capacity of 20KW** on **L-1/ approved price** to Start-up & New Entrepreneur. The allocation of projects to such bidder shall be after evaluating their performance and progress of ongoing projects (if any).These allocations may depend upon the availability of work and fund thereof.

b. **START-UP/MSME**- CREDA may consider Start-up Company/MSME registered only in area of Solar PV modules/Batteries/Solar power plants/Solar invertors and PV System integrator, if it produces certificate of being a Start-up entity as issued by Government of India/valid production certificate (in Hindi or English) from the industries department of concerned state respectively.

NEW ENTREPRENEUR- CREDA shall consider Companies/Proprietorship firm/Partnership firm as NEW ENTREPRENEUR which are registered in CREDA as System Integrator on or before the date of submission of bid.

c. The eligibility criteria as per 1b. to 1e. shall be relaxed for Start-Up/MSME and New Entrepreneur bidders. The eligibility criteria applicable to Start-Up and New Entrepreneur bidders shall be as follows: -

i. Registration certificate as System Integrator in CREDA at the time of submission of the bid. In the event that the bidder is not registered as a System Integrator with CREDA at the time of bid submission, the bidder shall obtain such registration prior to the execution of the Contract Agreement with CREDA.

ii. Start -up & New Entrepreneur Bidder must have valid test report of all components such as solar modules, PCU, Batteries which he is going to use in the solar power plants. They will have to provide copy of such Test reports of components of solar power plants from test centre

approved by Ministry of New and Renewable Energy (MNRE) or NABL/BIS

iii. Certificate for Turnover and Original certificate of positive Net-worth duly signed by Chartered Accountant for financial year i.e. 2025-26. Turnover in this category of bidders should not exceed Rs.2 C**rores** in SPV Projects. ITR and Audited balance sheet of respective year must be submitted.

d. **EMD of Rs. 2 Lakhs** in the form of Demand Draft/Pay Order or RTGS/NEFT for New Entrepreneur bidders.

e. Start-ups bidders and bidders having manufacturing certificate issued from MSME, Government of India shall be exempted from submission of Earnest Money Deposit (EMD).

f. Start -up & New Entrepreneur are not allowed to quote prices. **In case they quote, their quoted price will not be considered for evaluation.**

4. BIDDING PROCESS-

For ease of accessing the e-bidding website and registration the following is to be done by bidder -

a. Visit https:// gem.gov.in

b. Prospective bidders are requested to download, read and understand the Manuals present on the website so as to clearly understand the bid submission process.

c. The user will be directed to e-bidding page where all information regarding registration is available along with helpline details.

d. Technical bid and Price Bid shall be submitted online only at https:// gem.gov.in latest by **05.00 PM on 20-08-2026**. Bids submitted after scheduled time and date shall not be considered.

5. EMD -

Earnest Money Deposit of Rs. Ten Lakhs for individual and consortium bidders /Two Lakhs for new entrepreneur to be submitted in the form of Demand Draft/Pay Order or RTGS/NEFT as mentioned in the **NIT** vide no. 5364/CREDA/SPV-PP/2026-27 Date: 31.07.2026**,** EMD submitted in any other form e.g. **Cash/Bank Guarantee/FDR/TDR etc. shall not be accepted.**

6. SUBMISSION OF DOCUMENTS -

a. All the documents including technical and financial Bid should be submitted online on GeM portal https:// gem.gov.in as per the items mentioned in the Checklist on page no.06 in this bid.

b. Bidders are advised to finish all the bidding portal related activities such as registration, USB certificate/token approval, and payments etc. well in advance so as to avoid last minute difficulties during the bid submission.

c. Bidders are also advised to make themselves fully aware with the bid submission mechanism to avoid last minute hassles and doubts during bid submission. CREDA shall only entertain genuine technical issues/glitches, provided that the bidder submits evidence regarding the same.

d. Additionally, the bidders shall also have to submit all the documents, in original hard copy, as required in this bid as per the checklist on page 06 during the opening of technical bid. Bidders shall have to submit only the documents as per the checklist in the following envelopes.

Envelope A – Pre Qualification Documents (original DD should be submitted in this envelope)

Envelope B –Financial Qualification Documents.(GST, PAN; Networth; Turnover; ITR and Balance Sheet)

Envelope C –Technical Qualification Documents

Note: The Envelopes mentioned above are only for submission's sake only and must not be related with the Envelopes mentioned in the context of the checklist on page-06. The documents submitted in hard copy (offline) before CREDA head office must match with those submitted in the GeM portal. Any document other than the uploaded document shall not be considered. CREDA's tender committee will only evaluate the documents submitted on GeM portal. In no case the hard copy of documents shall be evaluated, they are only for record keeping by CREDA.

7. SPECIFICATION AMENDMENTS-

a. The Specifications of SPV Modules, Off-Grid PCU/Invertor, Battery LMLA & T-Gel, Structures, Earthing LA, ACDB, DCDB, AJB, MJB and other BOS etc should be as per as Specified in the Bid. If any amendments are issued by CREDA in due course of time, in this context, then those shall be applicable under this Bid.

b. CREDA reserves the right to amend or change any specifications of the entire or any component of Solar Power Plant system even after the issuance of sanction order as per the site conditions and demand.

8. GST & PAN-

Bidder shall have to submit copies of GST registration number and PAN numbers issued by the appropriate authority.

9. THE BID-

a.The Pre-Qualification, Technical-Financial Qualification Documents and Price Bid, other related documents must be uploaded in the portal i.e. https:// gem.gov.in **from 31-07-2026 05:00 PM onward till 20-08-2026 up to 05:00 PM.**

b. Nobody is authorized to receive or grant receipt for Bid delivered on behalf of CREDA. **Bid received through any other means shall not be considered and shall be rejected.**

10. ANALYSIS OF RATE -

Bidder should quote their rates considering variation of site conditions and all other factors in price of different components and keeping the quantum and quality of work in mind. In the event that any bidder quotes rates that are exceptionally low or exceptionally high and are found to be unreasonable or non-workable in the opinion of CREDA, the Tender Evaluation Committee reserves the right to conduct a market survey and/or rate analysis to assess the feasibility of such rates. The findings of such survey/analysis shall be placed on record, and CREDA may reject such bid if the quoted rates are determined to be unworkable or detrimental to the satisfactory execution of the work.

11. REGISTRATION OF BIDDER–

The bidder shall be registered with CREDA as a System Integrator at the time of submission of the bid. In the event that the bidder is not registered as a System Integrator with CREDA at the time of bid submission, the bidder shall obtain such registration prior to the execution of the Contract Agreement with CREDA. Further, all component vendors proposed by the bidder for supply of major system components under the scope of work shall also be registered with CREDA prior to the execution of the Contract Agreement. Failure to obtain the requisite registrations within the stipulated time shall render the bidder ineligible for award of the contract and CREDA shall be at liberty to take appropriate action as per the tender conditions.

12. VALIDITY-

Full descriptive particulars and complete specifications should accompany the offer. Offers should be kept open for acceptance for at least **180 days** from the date of opening. After finalization of this Bid the approved rates shall be valid **for one year** from the date of award; however, CREDA shall have liberty to increase or decrease this validity if needed.

13. TERMS & CONDITIONS-

a.The terms, conditions and specifications mentioned in Bid document shall be binding on the Bidders and no condition or stipulation contrary to the conditions shall be acceptable. It may please be noted that the Bidders who do not accept terms and conditions stipulated in this Bid documents, their offers shall be liable to be rejected out-rightly without assigning any reason whatsoever.

b.Each page of Bid document & enclosures shall be signed by the Bidder and seal affixed. All the pages of the documents issued must be submitted along with the technical offer. In case of any corrections / alterations in the Bid, the Bidder should attest the same; otherwise, Bids may not be considered.

c.Bidders are also instructed to submit their Bids in properly arranged manner (with index, proper paging and with flags on important documents). Incomplete, lose, conditional or improper arranged Bids will not be accepted.

14. CREDA RESERVES THE RIGHT-

a.To reject or accept any or all Bids fully or partly without assigning any reason on the grounds considered advantageous to CREDA, whether it is the lowest Bid or not.

b.To split the quantities against the Bid further for the same items/work. No reason will be assigned by CREDA for this and will be binding on the Bidders.

c.To increase or decrease of aggregate quantities as per discretion or circumstances.

d.Due to large quantum of work & limitation of the time period for completion of the work CREDA may, if required, take consent from other eligible Bidders if they agree to work on rates approved by CREDA.

e.CREDA may undergo agreement with those eligible Bidders who give consent to work on rates standardized by CREDA and may allocate work to them. Rates approved through this Bid may be standardized for all eligible Bids to work for **One year from the date of award**. However, CREDA reserves right to curtail or extend this period.

f. CREDA reserves the right to amend or change minor specifications of the entire or any component of Solar Power Plant system even after the issuance of sanction order as per the site conditions and demand.

g. Before opening the price bid CREDA will evaluate the bid of any bidder on the basis of last 05 years performance and quality of work assured with proper Operation and maintenance (O&M) of the project.

h. In case of any quality and/or Operation and maintenance issue found, CREDA shall not consider the bid of respective bidder

15. COMMUNICATIONS -

a. All the communication between Bidder and CREDA shall be in writing. Notice sent by Fax or other electronic means shall be effective on confirmation of the transmission. Notice sent by registered post or speed post shall be effective of delivery or at expiry of normal delivery period as under taken by Postal Service.

b. Offers through Telegraph/Fax/Emails/Post/Courier or open offers etc. received shall be summarily rejected.

16. PRE-BID MEETING AND QUERIES SUBMISSION IN WRITING-

a. All suggestions, doubts, confusion, request, queries etc., shall have to be presented to CREDA in writing or through email to credatendercell@gmail.comon or before **06-08-2026 till 05:00 PM**. After that any representation in this regard shall not be considered. A Pre-Bid Meeting shall be held on **07-08-2026** at CREDA conference hall to discuss and clarify the queries received within the prescribed period. Only those queries submitted on or before the specified deadline shall be taken up for discussion during the Pre-Bid Meeting.

b. The purpose of pre-bid queries is to clarify issues and questions related to this Bid that can be raised at that stage. Any amendments in the bid documents which may become necessary as a result of pre-bid queries received shall be part of original Bid document and communicated through corrigendum on CREDA website www.creda.co.in and on Gem Portal www.gem.gov.in.

17. TECHNICAL CRITERIA-

a. Bidder must have certified copy of original valid test report of the integrated systems or their major component in the name of manufacturer. They will have to provide copy of such test report of the integrated systems or their major component from Solar Energy Test Centre or any other test center accredited by Ministry of New & Renewable Energy (MNRE)/ NABL. Bidder must also have to submit test reports of all the major components such as SPV Module, Battery, and PCU cum Inverter. Therefore bidder shall have to submit independent test reports of each major components used.
Financial bid of those Bidders will not be opened who have not submitted valid test report.
Bidder should have test certificate for system valid at the time of opening of the bid.

b. The Bidder should have sufficient technically qualified and well-experienced manpower for execution of the project and after sales service of the systems. These details may be called by CREDA and in case there is any deficiency found the Bidder may be debarred.

c. Financial bid of those Bidders will not be opened who have not submitted valid test reports for system.

18. FORFEITURE OF EARNEST MONEY DEPOSIT-

It should be clearly understood that in the event of Bidder failing to enter into the agreement in the prescribed format on their quoted rates and also fails to execute assigned works under any Scheme of CREDA, within stipulated time, if he is so communicated within the validity period of the offer, the full amount of earnest money will be forfeited and Bidder shall be blacklisted and/or debarred from future business with CREDA including future participation in bids up to three years. CREDA's decision in this regard will be final and binding on the Bidders.

19. PRICE OF SUPPLY OF SOLAR POWER PLANT SYSTEMS WITH INSTALLATION, COMMISSIONING AND TESTING-

a. The Price quoted for all configuration of each category solar power plant systems with installation, commissioning and testing of SPV Modules, Off-grid PCU, LMLA, T-Gel, battery bank, Lightening arrester, earthing, Civil works and all other required BOS like Cables, Suitable Nut Bolts etc. with 5 years system warranty without CMC. The GST shall be paid extra as per prevailing rate (GST

Notification existing/effective at the time of invoicing will be applicable). The prices shall be filled exactly as per **e-Price Bid enclosed**.

b.Any change in GST shall be become applicable during the period of contract.

c.In this regard if there is any change in the composition ratio of goods and services by any Authority/ Courts, same shall be applicable.

d.**There shall be no escalation of rates under any circumstances.**

20. ENGINEERING DOCUMENT-

Bidders will have to submit Engineering Documents with technical details, drawings, Specifications of components and make etc. to CREDA for approval, as and when asked by CREDA. Works may only be started out only after approval of the Engineering Document and their samples.

21. COMPREHENSIVE MAINTENANCE CONTRACT(CMC) -

Comprehensive Maintenance Contract shall have two distinct components as described below-

a. Preventive / Routine Maintenance: This shall be done by the bidder at least once in every three month and shall include activities such as cleaning and checking the health of the SPV Battery, top-up the battery in case of LMLA battery , cleaning of module surface, tightening of all electrical connections and any other activity that may be required for proper functioning of the SPV Power Plant as a whole.

b. Breakdown / Corrective maintenance: Whenever a complaint is lodged by the user/CREDA, the bidder shall attend to the same within a reasonable period of time (not exceeding 07 days from the date of complaint) and rectify the defects, period. Replacement of the defective component/ spares if required as and when such requirement would arise. The replacement work shall be carried out within the specified time limit i.e. maximum 07 days for minor replacement/repair and 15 days for major replacement/repair. It is mandatory that the bidder shall submit a certificate, about the rectification/replacement work done, from the concerning beneficiary(s) to the DO, failing which it will be assumed that the bidder has not performed its duties. Major and minor replacement/repair shall be defined by CREDA separately.

For carrying out the maintenance service during CMC effectively, the system integrator shall establish one local service center at suitable place (preferable at the same district).

c. Facilities at the local Service Center: The bidder shall maintain the following facilities at the Local Service Centre for ensuring highest level of services to the end user:

i. Adequately trained manpower specifically trained by the bidder for carrying out the service activities.

ii. Sufficient spare parts, to extend services at the beneficiary's place / site(s).

d. The System Integrator shall submit certificates of maintenance / quarterly visits in the enclosed format **(Annexure- X)** to respective DOs on quarterly basis, along with the service reports.

e. If the bidder fails to repair the systems against the complaints of breakdown /Corrective maintenance to ensure 100% working status during CMC period in stipulated period i.e. maximum 30 days. Repair / replacement work will be done by CREDA from their SD or any other due payments available with CREDA.

f. A detailed methodology stating the plan to undertake the work of Maintenance Contract, proposed network of service centers should be submitted at the time of Contract.

Awarding the work of CMC to bidders is totally at the discretion of CREDA. Also, if the bidder is awarded with CMC work, then they must have to submit quarterly monitoring report of the system working satisfactorily duly authenticated by EE of concerned Zonal Office of CREDA.

22. SAMPLES –

a.Bidders shall individually display the samples of the major components proposed to be supplied under the tender. The displayed samples may either be manufactured by the bidder or sourced from vendors registered with CREDA. The samples shall include **one Solar PV Module**, **one LMLA Battery**, **one T-Gel Battery**, **PCU-cum-Inverter**, **ACDB**, **DCDB**, **Lightning Arrestor**, **Earthing Kit**, and other **Balance of System (BOS)** components, as applicable, conforming to the tender specifications. The samples shall be displayed for **SPV Power Plant (SPVPP) of 4000 W / 400 Ah / 96 V with LMLA/T-Gel Battery under**

Category-I and **SPV Power Plant (SPVPP) of 15000 W / 600 Ah / 240 V with LMLA/T-Gel Battery under Category-II**. In addition, the bidder shall also display **one sample of a leg member, purlin, angle, and C-channel** proposed to be used in the **Module Mounting Structure (MMS)**, conforming to the technical specifications prescribed in the tender.

b. However, for display of structure for module, the structures shall have to be fabricated by registered vendors of CREDA.

c. Prospective bidders are allowed to provide Manufacturer Authorization Form (MAF) only from such vendors at the time of sample display as well as in the technical bid. In addition to above, such bidders shall have to submit Manufacturer Authorization Form (MAF) on Manufacturer's letter head issued for the above tender with respect to all the major components of Solar Power Plant.

d. CREDA shall examine the samples and issue Sample Verification certificate to individual bidders. The bidders shall have to mandatorily upload this certificate in addition to manufacturer authorization in the technical bid.

e. Out of the samples displayed by the bidder for verification, one (1) Solar PV Module, one (1) Battery (LMLA/T-Gel, as applicable), one (1) PCU/Inverter, one (1) ACDB, one (1) DCDB, one (1) Lightning Arrestor, and one (1) Earthing Kit shall be identified as the **approved reference samples**. Upon approval by CREDA, these reference samples shall become the **property of CREDA**. However, the approved System Integrator (SI) shall retain the approved reference samples in its safe custody throughout the validity period of the tender/contract. CREDA reserves the right to call for and inspect these reference samples at any time during the validity of the tender/contract for the purpose of quality assurance, verification, comparison with the materials supplied and installed, or for any other inspection considered necessary. The System Integrator shall produce the reference samples before CREDA within the stipulated time whenever called upon. At the time of sample verification, the bidder shall submit the **make, model number, and serial number** (wherever applicable) of the **Solar PV Module, Battery, PCU/Inverter, ACDB, DCDB, Lightning Arrestor, and Earthing Kit**. In cases where a component does not bear a serial number, the bidder shall provide the **manufacturer's identification details**, including the make, model number, batch number, catalogue number, or any other unique identification.

If Bidder/ Owner of the Test Report provides any false/fake information or documents, then they shall be debarred/blacklisted **for a period up to three (3) years** for participation of any activity of CREDA and their EMD will be forfeited and registration in CREDA shall be cancelled

If required, samples of the components shall have to be displayed for CREDA in prescribed manner after receipt of notification of CREDA for testing, verification purpose without any additional cost.

23. INSPECTIONS -

CREDA reserves right to inspect the material at Godowns/Temporary stores before dispatch and also at works sites.

24. MANDATORY DEDUCTION -

a. CREDA shall deduct various statutory taxes like IT TDS, GST TDS and various cess on the payment made by the beneficiaries as contribution to SI's and subsidy payable by CREDA i.e. total cost of system.

b. **WCT-** This deduction will be made at the rate of 01% on the total cost (including beneficiary share) of the system.

c. **Royalty-** In the absence of Royalty clearance certificate royalty will be deducted at the market rate on the consumption of minor minerals like sand and aggregates.

25. CORRUPT OR FRAUDULENT PRACTICES -

a. CREDA requires the bidder/SI to strictly observe the laws against fraud and corruption in force in India, namely, Prevention of Corruption Act, 1988.

b. It is required that each bidder/SI (including their respective officers, employees and sub-contractors) adhere to the highest ethical standards, and report to the Government/ Department all suspected acts of fraud or corruption or coercion or collusion of which it has knowledge or become

aware, during the tendering process and throughout the negotiation or award of contract.

26. MANDATORY EMPLOYMENT-

Qualified diploma engineer with minimum wage rupees 15000/- per month for works above rupees 20 lacs and Qualified graduate engineer with minimum wage rupees 25000/- per month for works above rupees 01 crore shall have to be deployed by the System Integrator. (As per CG Govt.'s order no. F7-17/2020/1-6 Dated 02.12.2020)

27. TAX OBLIGATIONS-

CREDA shall deduct TDS for Income Tax, applicable cess on Civil Work etc. under various acts and deposited with the appropriate authority. Costs and taxes before execution of agreement with CREDA, so as to ensure tax deposition as per Government Rules accordingly.

28. JURISDICTION OF THE COURT-

Any dispute arising out of the contract shall be subject to the jurisdiction of Hon'ble High Court of Chhattisgarh.

SECTION - 2
GENERAL CONDITIONS OF CONTRACT

1. DEFINITIONS -

In writing General Conditions of Contract, the specifications and bill of quantity, the following words shall have the meanings hereby indicated, unless there is something in the subject matter or content inconsistent with the subject.

a. **CREDA** shall mean the Chhattisgarh State Renewable Energy Development Agency represented through the Superintending Engineer/Executive Engineer.

b. **Work** shall mean any work entrusted to the Bidder as mentioned in the scope of work and Work Order.

c. The "**Engineer in charge**" shall mean the Engineer or Engineers authorized by CREDA for the purpose of this contract. Inspecting Authority shall mean any Engineering person or personnel authorized by CREDA to supervise and inspect the erection of the SPV Power Plant.

d. "**The Eligible SI/Bidder**" shall mean the Bidder awarded with the contract or their successors and permitted assigns. Contract Price shall mean the sum named in or calculated in accordance with the provisions of the contract as the contract price. General Conditions shall mean the General conditions of Contract.

e. "**Specifications**" shall mean the specifications annexed to these General Conditions of contract and shall include the schedules and drawings attached thereto or issued to the eligible Bidder from time to time, as well as all samples and pattern, if any,

f. "**Month**" shall mean calendar month. "Writing" shall include any manuscript, typewritten, printed or other statement reproduced in any visible form whether under seal or written by hand.

g. **Bidder of Chhattisgarh State-**

i. Bidder registered as a Pvt. Ltd. / Ltd. / Partnership /Proprietorship firm incorporated/registered in the State of Chhattisgarh shall be treated as Bidder of Chhattisgarh.

ii. Bidder, whose firm is registered as a Pvt. Ltd. / Ltd. / Partnership / Proprietorship firm incorporated and/or worked in the State of Chhattisgarh (under CREDA scheme) consistently for five years shall be treated as Bidder of Chhattisgarh.

2. PROOF OF MANUFACTURER-

Those bidders who are also manufacturers of an important component of SPVPP such as SPV Modules, PCU, Structures of SPV Power Plant (SPVPP) and Batteries shall have to submit proof of their manufacturing unit and appropriate registration documents and list of Machineries and Equipment's.

3. CONTRACT DOCUMENT-

The term "Contract" shall mean and include the General conditions, specifications, schedules, drawings and Work Orders etc., issued against the contract schedule of price or their final general conditions, any special conditions applying to the particular contract specification and drawings and agreement to be entered into. Terms and conditions not herein defined shall have the same meaning as are assigned to them in the Indian contract Act or any other Act in vogue or by any person of common knowledge and prudence.

4. MANNER OF EXECUTION-

a. Execution of work shall be carried out under Government Mode Scheme of CREDA in an approved manner as outlined in the technical specifications or where not outlined, in accordance with desired Specifications laid down by CREDA, to the reasonable satisfaction of the Engineer in-charge.

b. Successful Bidder / Bidder here-in-after called the **SI** (System Integrator).

i. After receipt of LOI from CREDA the eligible SI shall conduct a detailed survey of site and submit site details feasibility report and in prescribed format**(Form A & B)** after due verification and signatures of Sarpanch/Sachiv of concerned Gram Panchayat or concern authorized person of beneficiary institute/site. All necessary documents and survey details shall have to be submitted in concerned District Office of CREDA in prescribed manner.

ii. SI shall also have to submit layout plan duly consented and signed.

iii. Engineer-in-Charge of District Office of CREDA shall examine these reports. After his satisfaction will forward details with his recommendations to EE of Concerned Zonal Office of CREDA. Engineer-in-charge may visit the site if he/she is not satisfied with survey report.

iv. In case Engineer-in-Charge of District Office of CREDA finds the site is not suitable for installation of SPV Power Plant, he/she will inform concerned beneficiary organization/ department accordingly and request for alternative site /necessary action.

v. Executive Engineer of concerned Zonal Office CREDA will decide the technical feasibility and layout plan of site. Executive Engineer may visit the site if he/she is not satisfied with survey report.

vi. After satisfaction Executive Engineer will forward the site clearance report with technical feasibility to Head Office CREDA for issuance of workorders.

vii. Head Office, CREDA shall be final authority to approve or reject site finalization recommended by Zonal Offices.

viii. Concerned Section In-Charge of CREDA Head office after his satisfaction shall issue the work order to eligible SI for installation of SPV Power Plant.

ix. Work order shall be issued to the chosen System Integrator only after execution of the agreement with CREDA.

x. After issuance of LOI/Work Order(s), Executive Engineer of concerned Zonal Office CREDA shall finally approve site layout in writing in prescribed format.

xi. The SI shall start work within 15 days after the date of approval of site layout.

xii. All the related works like preparation of site clearance certificate, geo-tagged photograph of proposed site shall also be uploaded online in Solar Power Plant Portal by SI.

c. All the materials required for the installation of SPV Power Plant as per Work Order issued shall be kept at site in the custody of the SI. CREDA shall not be responsible for any loss or damage of any material during the installation.

d. All the electrical works should be done as per various provisions of Indian Electricity Act. The persons engaged for carrying out electrical works should have a valid **B-class** license or above issued by licensing board of Chhattisgarh.

e. After work is started, CREDA may carry out inspections at various stages at its discretion.

f. After installation, joint inspection shall be done in presence of SI and CREDA and after successful commissioning of SPV Power Plant and its approval from CREDA, a JCC shall be signed and the necessary documents shall be forwarded for payments as per guidelines and procedures of CREDA.

5. VARIATIONS, ADDITIONS & OMMISSIONS-

CREDA shall have the right to alter, amend, omit, split or otherwise vary the quantum of work, by notice in writing to the SI. The eligible SI shall carry out such variation in accordance with the rates specified in the contract so far as they may apply and where such rates are not available; those will be mutually agreed between CREDA and the eligible SI.

6. INSPECTION-

a. The Engineer-in-Charge or his authorized representative(s) shall be entitled at all reasonable times to inspect and supervise and test during supply, installation and commissioning. Such inspection shall not relieve the eligible SI from their obligations under this contract.

b. Material can be inspected before dispatch or in transit by the authorized representatives of CREDA at the factory or godowns at the cost of the eligible bidder, if desired by CREDA. Additionally, CREDA reserves the right to inspect the manufacturing unit in cases where the bidder and the manufacturer of the material are different entities. Furthermore, CREDA may also blacklist or debar the manufacturer **for a period up to three (3) years** in case of any manufacturing defect.

c. CREDA will undertake real time performance and quality test of randomly selected solar power plant and components during the course of execution as per the specifications and guidelines laid by CREDA to ensure quality and performance of solar power plants and its components.

7. COMPLETION OF WORK-

a. Time being the essence of contract, the installation of the SPV Power Plant shall be completed within the time schedule prescribed in the Work Order.

b. After finalizing of rates and successful bidder, approved rates along with draft agreement will be sent to all successful bidders for acceptance, they will have to provide Acceptance within 10 days of issuance of draft agreement.

c. CREDA may issue "LETTER OF INTENT" (LOI) after execution of agreement, to those bidders who accept the approved rates. However, it depends upon the availability of work and fund thereof.

d. After issuance of "LOI", System integrator will start Survey for installation & Commissioning of Solar Power Plant System and submit the site clearance certificate within the time schedule mentioned in LOI

8. ELIGIBLE SYSTEM INTEGRATOR'S LIABILITY IN CASE OFDEFAULT-

CREDA may by written notice of default to the eligible SI, terminate the contract in circumstances detailed hereunder -

a. If in the opinion of the CREDA, the eligible SI fails to complete the work within the time specified in the Work Order or within the period for which extension has been granted by CREDA to the eligible SI.

b. If in the opinion of CREDA, the eligible SI fails to comply with any of the provisions of this contract.

c. In the event of CREDA terminating the contract in whole or in part as provided in paragraph (a) above, CREDA reserves the right to engage another eligible SI or agency upon such terms and in such a manner as it may deem appropriate and the eligible SI shall be liable to CREDA for any additional costs or any losses caused to CREDA as may be required for the completion of erection of the SPV Power Plant and or for penalty as defined under this Bid document until such reasonable time as may be required for the final completion of the work. CREDA may debar such a defaulter SI for up to three years from taking participation in taking part in all activities of CREDA.

d. In the event CREDA does not terminate the contract as provided in paragraph (a) the eligible SI shall continue performance of the contract, in which case he shall be liable to CREDA for penalty for delay as set out in clause 15 until the work is completed.

9. FORCE MAJEURE-

The eligible SI shall not be liable for any penalty for delay or for failure to perform the contract for reasons of FORCE MAJEURE such as of God, acts of public, enemy, acts of government, cyclone, fires, floods, epidemics, quarantine restrictions, strikes, freight embargoes provided that if SI shall submit delay notice with appropriate cause of delay to the CREDA in writing within **15 days** of force majeure. CREDA shall verify the facts and may grant such extension as facts justify. Delay in supply of any accessories of solar power plants etc. by the related vendors, to whom the Bidder has placed order, shall also not be treated as force majeure.

10. REJECTION OF WORKS –

In the event of any of the material supplied/work done by the eligible SI is found defective in material or workman ship or otherwise not in conformity with the requirements of this contract specifications, CREDA shall either reject the material and/or work and advise the eligible SI to rectify the same. **CREDA may impose penalty for such rejection up to the 200% cost of the entire system. Habitual/repeated offenders shall be black listed/debarred to participate in the any Bid/ Activity of CREDA for a period up to three (3) years.** The eligible SI on receipt of such notices shall rectify or replace the defective material and rectify the work free of cost. If the eligible SI fails to do so CREDA may-

a. At its option replace or rectify such defective materials and/or work and recover the extra cost so involved from the eligible SI plus **15%** service charges of the cost of such rectification, from the eligible SI and/ or terminate the contract for balance work/ supplies with enforcement of penalty **as**

stated above.

b. Defective materials/workmanship will not be accepted under any conditions and shall be rejected outright without compensation. The eligible SI shall be liable for any loss/damage sustained by CREDA due to defective work **with enforcement of penalty as stated above**.

11. EXTENSION OF THE TIME-

a. If the completion of installation is delayed due to any reason beyond the control of the eligible SI, the eligible SI shall without delay give notice to the CREDA in writing of his claim for an extension of time. CREDA on receipt of such notice may or may not agree to extend the contract/delivery date of the SPV Power Plant as may be reasonable but without prejudice to other terms and conditions of the contract.

b. Chief Executive Officer, CREDA has full right for unconditional time extension.

12. MAKES OF EQUIPMENTS TO BE USED IN THE WORK-

a. The Solar Modules, Battery, PCU, Charge Controller & Other BOS should be as per BIS/IEC/CE/IES and MNRE standards.

b. The eligible SI has to ensure that equipment's are as per Technical Requirements of guidelines of CREDA as complied with.

c. Manufacturer Authorization Form (MAF) on with Manufacturer's Letter head of Solar Modules/ Battery/ PCU/ Charge Controller/Structure/Other BOS which the SI is intending to use in the installation shall be submitted with technical bid.

d. The SI shall ensure that all the major components of the Solar Power Plant such as SPV Modules, Battery, PCU, Charge Controller and other BOS are procured from registered vendors of CREDA of respective components.

13. WARRANTEE PERIOD AND POST INSTALLATION SERVICES-

a. The work done/material supplied by the eligible SI should be warranted for satisfactory operation and against any defect in material and workmanship including solar PCU, Batteries and Structures and other balance of equipment, at least for a period of **5 (five) years,** from the date of commissioning of the SPV Power Plant other works as per scope of work. **(warrantee shall be on site)** During the warrantee period, the bidder/OEM shall, at its own cost and risk, repair, rectify or replace any defective equipment, component or part at installation site without any additional financial implication to the purchaser, in accordance with the standard warrantee terms and conditions of the OEM.

b. The decision of the technical committee of CREDA in respect of warrantee claims, defects, repair/replacement requirements and interpretation of warrantee provisions shall be final and binding on all bidders.

c. Failure to comply with the warrantee obligations and directions of CREDA may attract penal action, including forfeiture of EMD and blacklisting/debarment of the bidder, as per the applicable provision of tender document.

d. Warrantee on SPV Modules shall be for **10 (ten) years** from the date of commissioning of the SPV Power Plants must be warranted for their output peak watt capacity, which should not be less than **90%** at the end of **10 years** and not less than **80%** at the end of **25 years**. **(warrantee shall be on site)**

e. The above warrantee certificates shall be furnished to the CREDA for approval. Any defect noticed during this period should be rectified by the supplier free of cost upon written notice from CREDA provided such defects may be due to bad workmanship or bad materials used.

f. The warrantee period shall be extended by the period during which the plant remains non-operative due to reasons within control of the eligible SIs.

g. This warrantee must be onsite warrantee (As per Policy uploaded in CREDA website) and the eligible SI will have to replace the defective material within **07 days** positively from the date of information given to him by CREDA.

h. Care should necessarily be taken to make the SPV Power Plants operational, once the reporting of the fault/non-operational status is done, within 5 days. If the SPV Power Plant is not made operational within **07 days** CREDA may rectify the same at the cost of SI and the warrantee period shall be extended accordingly for delay period.

i. System Integrators shall have to establish their service stations in the allocated area and shall have to keep sufficient quantity of spares and man power to ensure proper service network for taking care of smooth functioning of SPV Power Plant installed by them. SI shall have to give a toll-free number to register complaints.

14. TERMS OF PAYMENT-

a. 90% of the cost of the work order (Excluding GST) after successful commissioning of the Solar Power Plant at the site and submission of JCC in hard copy.

b. Balance 10% of the eligible payment excluding GST shall be retained by CREDA as Security Deposit for a period of **60 Months** from the date of commissioning**.**

c. Goods and Services Tax (GST) shall be paid at the time of payment, as applicable, in accordance with the prevailing GST Act, Rules, Notifications, Circulars, and amendments issued by the Government of India from time to time. The GST component shall be released against submission of a valid tax invoice and other requisite documents as prescribed under the applicable GST regulations.

15. PENALTY FOR DELAY IN COMPLETION OF CONTRACT-

a. If the eligible SI fails to complete the assigned work within the schedule time specified in the Work Order or any extension granted there to, CREDA will recover from the SI as penalty of **half (0.5) percent per week** or up to **Two percent (2%) per month** of the system price excluding GST for every delayed system. For this purpose, the date of taking over shall be reckoned as the date of completion. The total penalty shall not exceed **5% (Five Percent)** of the cost. The eligible SI shall not be liable for any penalty for delay or for failure to perform the contract for reasons of FORCE MAJEURE. Additionally, CREDA reserves the right to **black list or debar such System integrator to participate in the any Bid/ Activity of CREDA for a period up to three (3) years** due to delay in work.

b. Review of the progress of installation of Solar Power Plant allocated to SIs shall be done time to time by CREDA and if the progress of installation is found unsatisfactory, the allocation of entire remaining uninstalled system or their part of can be re-allocated to other SI as per discretion of CREDA.

16. SECURITY DEPOSIT (SD)-

a. The Earnest Money shall be retained by CREDA up to validity of tender, after agreement is done to execute all the works referred to in the tender documents upon the terms and conditions contained or referred to therein and to carry out such deviations as may be required by CREDA.

b. Beside this **10%** of the cost shall also be retained as SD during the five years of warrantee period. No interest shall be payable on the SD.

c. Period for which SD are to be retained may be extended in case the warrantee period is extended due to nonperformance of the system.

d. All costs of damages and delays for which the eligible SI is liable to the CREDA will be deducted from any money due to the eligible SI including the security deposit of any project under CREDA.

17. INSURANCE-

The eligible SI shall arrange insurance coverage for the materials and Solar Power Plant System at his/ beneficiary's custody for the work under execution and successful commissioning and subsequent handover to the beneficiary. The eligible SI shall take up insurance or such other measures for the manpower so as to cover the claim for damage/accident under workmen's compensation Act and other applicable State/Central laws. CREDA shall not bear any responsibility on this account.

18. PENALTY DUE FROM THE ELIGIBLE SI-

All costs of damages and delays for which the eligible SI is liable to the CREDA will be deducted from any money due to the eligible SI including the security deposit of any project under CREDA. Additionally, CREDA reserves the right to blacklist or debar such a bidder from participating in future projects or activities of CREDA **for a period up to three (3) years**.

19. RESPONSIBILITY OF ELIGIBLE SI-

Notwithstanding anything mentioned in the specifications of subsequent approval or acceptance of the SPV Power Plant by CREDA, if any, the ultimate responsibility for satisfactory performance of the entrusted work shall rest with the eligible SI. If in any case the eligible SI does not complete the work as per the Work Orders issued to them then CREDA may take over the task & complete the project at the risk and cost of eligible SI.

20. RESPONSIBILITY TO RECTIFY THE LOSS AND DAMAGE-

If any loss or damage occurs to the work or any part thereof or materials/plant/equipment's for incorporation therein the period for which the eligible SI is responsible for the cause thereof or from any cause whatsoever, the eligible SI shall at his own cost rectify/replace such loss or damage, so that the permanent work confirms in every respect with the provision of the contract to the satisfaction of the Engineer. The eligible SI shall also be liable for any loss or damage to the work/equipment occasioned by him in course of any operation carried out to him during performing the contract.

21. RESPONSIBILITY TOWARDS THE WORKMAN OR OUT SIDERS–

a. **The eligible SI shall have to take insurance coverage from any authorized Insurance Company against Workmen compensation due under Workmen Compensation Act and submit copy of the insurance document before issuance of Work Order.**

b. The eligible SI shall ensure all safety measures during execution and repairs of the work. CREDA, will, in no case be responsible for any accident fatal or non-fatal, caused to any workman or outsider in course of transport or execution or repairs of work.

c. All the expenditure including treatment or compensation will be entirely borne by the eligible SIs. The eligible SI shall also be responsible for any claims of the workers including, labor payments PF, Accidental Insurance, Gratuity, ESI & other legal obligations.

d. CREDA shall have all rights to deduct such claims of payments from SI in case of complaints of such violations.

22. CERTIFICATES NOT TO AFFECT RIGHTS OF CREDA-

The issuance of any certificate by CREDA or any extension of time granted by CREDA shall not prejudice the rights of CREDA in terms of the contract nor shall they relieve the eligible SI of his obligations for due performance of the contract.

23. SETTLEMENT OF DISPUTES THROUGH ARBITRATION-

a. Except as otherwise specifically provided in the contract, all disputes concerning questions of fact arising under the contract shall be decided by the Chief Executive Officer (CEO), CREDA provided a written appeal by the eligible SI is made to CREDA. The decision of the CEO, CREDA shall be final and binding to the all concerns.

b. Any dispute or difference including those considered as such by only of the parties arising out of or in connection with the contract shall be to the extent possible be settled amicably between the parties. If amicable settlement cannot be reached then all disputed issues shall be settled by arbitration at Chhattisgarh.

24. LAWS GOVERNING CONTRACT-

The contract shall be constituted according to and subject to the Laws of India and jurisdiction of the High Court of Bilaspur, Chhattisgarh.

25. LANGUAGE AND MEASURES-

All documents pertaining to the Contract including specifications, schedules, notice correspondences, operating and maintenance instructions, drawings or any other writings shall be written in English / Hindi language. The metric system of measurement shall be used in this contract.

26. CORRESPONDENCE-

a. Any notice to the eligible SI under the terms of the contract shall be served by registered mail to the registered office of the eligible SI or by hand to the authorized local representative of the eligible SI and copy by post to the eligible SI's principal place of business.

b. Any notice to CREDA shall be served to the Chief Engineer, CREDA Raipur in the same manner.

27. SECRECY-

The eligible SI shall treat the details of the specifications and other documents as private and confidential and they shall not be reproduced without written authorization from CREDA.

28. AGREEMENT-

The successful eligible SI shall have to enter into an agreement with the CREDA in the approved contract agreement form within **10 days** of the receipt of call from CREDA.

29. DECLARATION OF CONFLICT OF INTEREST-

a. Any regular employee working or worked on basis of contract or through placement agency cannot work directly or indirectly in any scheme of CREDA. If such a person is found working with any SI or through sublet then, such SI shall be blacklisted **for a period up to three (3) years**.

b. The bidder shall not be permitted to Bid for this Tender, if any relative of bidder is employee of CREDA working as regular employee or work on the basis of contract or through placement agency.

Note: - By the term near relatives are meant Wife, Husband, Parents and son, Brother, Sister, Brother-in-law, Father-in-law, and Mother-in-law etc.

c. Bidder must produce an affidavit **(Annexure – III)** stating the names of retired/removed employee of CREDA (if any) in his employment who retired /removed within last two years, if in case there is no such person in his employment, his affidavit should clearly state this fact. This affidavit is mandatory, if it is not produced along with the bid, the bid shall be rejected.

30. BID EVALUATION CRITERIA-

a. Offers of only those parties, who are found qualified based on Eligibility Criteria and Technical Bid, will be taken into further consideration and financial bid of only those parties who are qualifying the criteria of Technical Bid will be opened.

b. Other things being equal, the lowest rates shall normally be preferred, but CREDA shall have rights and liberty to amend/lower the rates.

c. Conditional Bids shall not be accepted.

d. CREDA shall have rights and liberty to call any /other parties who are technically qualified but not accepted to work on approved rates, as and when required in accordance with quantum of work and scheduled time limits for completion of targets.

31. EVALUTION OF PRICE BID-

Price bid shall be evaluated on the basis of quoted rates. L1 rate i.e. lowest rate of Supply and Installation & Commissioning cost of Solar Power Plant System shall be considered, however CREDA shall have discretionary power to amend/lower the rates.

The rates quoted for Comprehensive Maintenance Contract (CMC) shall be evaluated separately, and the L1 bidder for CMC shall be determined independently of the Supply, Installation, and Commissioning rates.

32. ALLOCATION OF TARGETS AND AREA OF WORK–

a. Preference shall be given to L1 Bidder in any or all categories for allocation of works.

b. Additionally, the allocation of works to bidders, including L1 bidder shall be subject to their past performance in the schemes of CREDA. CREDA reserves the right to amend the allocations to bidders based on this criterion.

c. Increase or decrease allocations shall be decided at the sole discretion of CREDA, which shall be final, binding and conclusive on the bidders.

d. Allocation can be further extended or curtailed as per discretion of CREDA, in interest of expeditious work completion.

e. CREDA reserves all rights for allocation of works and the decision of CEO, CREDA shall be final and binding.

f. Review of the progress of installation of SPVPP System allocated to SIs shall be done time to time by CREDA and if the progress of installation is found unsatisfactory, the allocation of entire remaining uninstalled System or their part of can be re-allocated to other SI as per discretion of CREDA.

33. BID REJECTION-

If financial bid of a bidder has been opened on the **basis of technical bid of a bidder which has been determined to be substantially responsive to the bidding document and in latter stage it is**

found that bidder does not meet the eligibility criteria or the technical bid is found substantially non-responsive, CREDA reserves rights to reject such bid of a bidder anytime.

We (on behalf of Eligible SI/Bidder) have read all the above stated details &accept to comply with it in total.

(Name, Signature & Seal of the SI)

SECTION-3
SCOPE OF WORK

The scope of work in brief will be as follows-

1. **Survey of Sites, supply, installation & commissioning of SPV Power Plants as per design and specifications approved by CREDA and concerned agency, on turnkey basis. Five years onsite warrantee for manufacturing defects shall be required for each of the system after successful commissioning and proper handing over.**
2. **The scope of work shall also include the following:**

   a. The System Integrator shall conduct a survey of the site and submit the Site Clearance Certificate along with the layout plan indicating the proposed location for installation of the SPV Power Plant. The layout plan shall clearly identify the area earmarked for installation of the SPV Power Plant. The System Integrator shall complete the site survey and submit the Site Clearance Certificate along with the detailed site layout plan minimum in 15 (fifteen) days from the date of issuance of the Letter of Intent (LoI).

   However, in cases where the Letter of Intent (LoI) covers more than twenty-five (25) sites, the period for completion of the site survey and submission of the Site Clearance Certificates along with detailed site layout plans shall be extended to 30 (thirty) days from the date of issuance of the LoI.

   b. Work order shall be issued only after receipt of satisfactory site clearance reports suitable for system installation.

   c. The System Integrator shall complete the installation, testing, and commissioning of the SPV Power Plant at the site within 60 (Sixty) days from the date of issuance of the Work Order.

   d. SI shall furnish all necessary information to beneficiary for SPV Power Plant Warrantee, DOs & Don't etc. so as to avoid further misunderstandings and disputes.

   e. Detailed planning of time bound smooth execution of project.

   f. Supply, installation & commissioning of SPV Power Plants of required capacity as per design and specifications approved by CREDA, on turnkey basis.

   g. Providing User Manuals and Warrantee Cards to beneficiary /CREDA.

   h. SI shall have to submit JCCs within 120 days of Installation and Commissioning of SPV Power Plant in District Office of CREDA.

   i. Onsite warrantee for manufacturing defects for Five years fault-less operation, assure inventory for maintenance.

   j. SI must ensure safety and insurance against risk liability of all personnel associated during installation and repairs of the system.

   k. Training of at least two persons nominated by user, on the various aspects of operation and maintenance of the offered system after commissioning of the system.

   l. The eligible SI shall maintain sufficient inventory of the spares to ensure that the system can be made functional within 7 days from the communication of breakdown of the system during the warrantee period.

   m. The eligible SI shall run the system on trial basis and shall closely monitor the performance of the system before handing over the system, so that the assured generation can be estimated for monitoring of the performance of the system. CREDA shall examine the generation and as certain if the generation is adequate with reference to the capacity of the SPV Power Plant.

   n. The eligible SI shall have to monitor the performance of the system before its handing over to the beneficiary, so that the desired generation can be assured.

   o. Performance Guarantee Test: Successful performance guarantee test to demonstrate the rated capacity of SPV power plant as per CREDA's norms shall have to be conducted by SI in presence of representatives of CREDA, if required.

   p. System Integrators shall have to establish their service stations in the allocated area and shall have to keep sufficient quantity of spares and man power to ensure proper service network for taking care of smooth functioning of SPV power plant installed by them. SI shall have to give a toll-free number to register complaints.

   q. S.I. must submit the DCR certificate of module in the name of beneficiary along with J.C.C.

   r. The system shall have to be installed by trained manpower/contractor from a recognized training centre as per guidelines of CREDA. The training certificate can be checked by the officials of CREDA at the time of visit/inspection, if required.

   s. All the related works like preparation of site clearance certificate, geo-tagged photograph of proposed site shall also be uploaded online in Solar Power Plant Portal by SI.

   t. The eligible **System Integrator (SI)** shall submit a **Fortnightly Progress Report** to the concerned District/Zonal Office of CREDA as well as the Head Office, indicating the physical progress of the

allocated works, including site survey status, material supply, installation, commissioning, pending activities, issues/constraints, and the proposed action plan for timely completion of the project.

SECTION -4

TECHNICAL SPECIFICATION FOR SOLARPHOTOVOLTAIC POWERPLANT

I. GENERAL TECHNICAL SPECIFICATION:

A standalone solar photovoltaic power generator/plant proposed comprises of solar PV modules of given capacity, with battery bank, PCU with necessary control electronics, interconnecting wires / cables, module mounting structures, necessary grounding /earthing etc.

BROAD TECHNICAL PARAMETERS

SN	Category	Solar PV module Array Minimum Capacity (Wp)	PCU Minimum Capacity with MPPT and DC to AC Invertor (VA)	Battery Bank Capacity /Configuration LMLA and T-gel,)	
				LMLA, T-gel Battery	
				Voltage in V	Capacity in AH
1	Category-I	1000	1000	48	150
2		2000	2000	48	300
3		3000	3000	48	400
4		4000	4000	96	400
5		6000	6000	96	400
6		8000	8000	120	400
7		10000	10000	240	300
8	Category-II	15000	15000	240	400
9		20000	20000	240	600
10		25000	25000	240	600
11		30000	30000	240	800
12		35000	35000	240	1000
13		40000	40000	240	1000
14		45000	45000	240	1000
15		50000	50000	240	1000

II. MINIMALTECHNICAL REQUIREMENTS/ STANDARDS:

01. SPVMODULES-

a. **SPV** array contains specified number of same capacity, type and specification modules connected in series or parallel to obtain the required voltage or current output. Only IEC/BIS Tested module shall only be used in the system.
The wattage of each module should be minimum **500Wp** and open circuit voltage of the PV modules under STC should be at least 44.0 Volts. The module efficiency should not be less than **19.5%. (as per MNRE office memorandum no. 283/41/2024-grid Solar dated 01.05.26)**

b. Modules supplied with the SPV Power Plant systems shall have certificate as per **IS 14286 (Part 1):2023 / IEC 61215-1:2021, IEC 61215-1-1:2021 & IEC 61215-2:2021** specifications or equivalent National or International/ Standards. STC performance data supplied with the modules shall not be more than one year old.

c. Modules must qualify to IS/IEC 61730 Part I and II for safety qualification testing.

d. Modules must qualify to IEC TS 62804-1:2015 for the detection of potential-induced e-gradation - Part 1: Crystalline silicon (Mandatory in case the SPV array voltage is more than 600 VDC).

e. The name plate shall conform the IS 14286/IEC61215.

f. Module to Module wattage mismatch in the SPV array mismatch shall be within (±) 3 percent

g. Variation in overall SPV array wattage from the specified wattages shall be within zero percent to +10percent.

h. The PV Modules must be warranted for output wattage, which should not be less than 90% of the rated wattage at the end of 10 years and 80% of the rated wattage at the end of 25 years.

i. IDENTIFICATION ANDTRACEABILITY-

Each PV module must use a RF identification tag (RFID), which must contain the following information:

i Name of the manufacturer of PV Module
ii Name of the Manufacturer of Solar cells
iii Month and year of the manufacture (separately for solar cell and module)
iv Country of origin (separately for solar cells and module)
v I-V curve for the module (should be submitted in soft copy at D.O.)
vi Peak Wattage, I_m, V_m and FF for the module
vii Unique Serial No and Model No of the module
viii Name of the test lab issuing IEC certificate
ix Other relevant information on traceability of solar cells and module as per ISO 9001:2015 Quality Management System series.

The RFID must be inside of module lamination. The module laminate, but must be able to withstand harsh environmental conditions

k. The panel should be supplied with CREDA Logo in the form of sticker on the back of SPV panel or duly laminated inside the glass of solar module with the remark "Manufactured for CREDA". Inter connections of solar modules should be through good quality male female joint. Name of manufacturer, Sl. No. of Module & manufacturing year should be clearly fixed inside the glass lamination of every module. Back label should be affixed behind every module which should clearly state the specifications & capacity of the module.

l. All SPV modules must be **DCR as per MNRE guideline**. **(as per MNRE office memorandum no. 283/63/2025-grid Solar dated 25.05.26)**

Test reports/ certificate from IEC/NABL accredited laboratory to be mandatorily enclosed for relevant IEC/equivalent BIS Standards. All Solar modules shall be strictly as per MNRE's latest ALMM list.

02. BATTERY-

a. Battery Bank - Technical Specifications For Low Maintenance Lead Acid (LMLA)Battery-

2 Volts Tubular Plate Cell in dry charged condition for SPV Power Plant along with arrangement for inter connection for this cell in parallel connection, deep discharge

electrolyte, Volt meter, Level indicator, Porcelain/acid resistant ceramic vent plug, Petroleum. (for use in 2KW system and more capacities)

Supply of 12 Volts Tubular Plate long life low antimony Tubular Positive Plates Cells as per detailed Technical Specifications with deep discharge electrolyte insulated terminal connectors micro-porous ceramic vent plug for anywhere in the state of Chhattisgarh. (for use in 1KW system only)

The general specifications shall be as under:

i The battery bank shall consist of required number of deep-discharge electrochemical storage cells, suitably interconnected as required. Parallel connections of storage cells will be discouraged.

ii The cells shall be capable of deep discharge and frequent cycling with long maintenance intervals and high columbic efficiency. Automotive or car batteries shall not be accepted.

iii The nominal voltage and capacity of the storage bank shall be selected and specified by the supplier in the bid.

iv The self-discharge rate of the battery bank or individual cell shall not exceed four(4) percent per month.

v The permitted maximum depth of discharge (DOD) shall be specified by the supplier in the bid.

vi Unless otherwise specified the cycle life of the battery shall not be less than 1500 DC discharged cycles between the fully charged state and the permitted maximum DOD at the rate of C/10. It should be able to deliver 80% of its rated capacity from fully charged position to DOD.

vii The cells shall include explosion proof safety vents.

viii The cells shall include the required number of corrosion resistant inter-cell required chemicals electrolyte packed in separate containers. Full instructions and technical details shall be provided for electrolyte filling and battery recharging at site for the first time.

ix The cells shall preferably be supplied in dry charged or factory charged condition, complete with all required chemicals electrolyte packed in separate containers. Full instructions and technical details shall be provided for electrolyte filling and battery recharging at site for the first time.

x If the cells are supplied in uncharged conditions, then the supplier shall provide full instructions for first time charging including, but not limited to, the following:

(i) A check list of all items required.

(ii) Minimum specification with possible alternatives, of the required battery charger for first time charging

(iii) Instruction of electrolyte filling, battery charging etc. and instructions on the transportation of charged batteries, if required.

xi Suitable number of corrosion resistant and acid-proof storage racks shall be supplied to accommodate the cells. The rack design shall be such that minimum space is required, without any way obstructing the maintenance requirements. For metallic racks, standards specified for control panel enclosures and other metallic shall govern.

Battery Type	**LMLA**
Design life:	Minimum 05 years life at up to 50°C
Cycle Life (at 27^0C)	**For 2 volt-** 1500 Cycle at 80%DOD & 7500 Cycles At 20% DOD
	For 12 volt- 1500 Cycle to 80%DOD , 3000 Cycles to 50%DOD , 5000 Cycles to 20% DOD
Operating temperature:	Range : -20°C to +55°C 0 (Optimum life can be obtained at 35 °C)
Electrolyte	Lead Acid
Charging Current	max. 20% of the battery AH capacity min. 10% of the battery AH capacity
Bulk Voltage	**2 Volt cell-** 2.60V ±0.02 x no. of cell
Float Voltage	**2 Volt cell-** 2.30V ±0.02 x no. of cell
Load Reconnected Voltage	**2 Volt cell-** 2.16V ±0.02 x no. of cell
Low voltage disconnects	**2 Volt cell-** 1.90 ±0.02V x no. of cell

Recharge factor	110% of discharge Ah
Self-discharge per month.	<4% @ 27^{0}C
Charge efficiency	>93% @ 20% DOD (i.e. 80% SOC)

xii All technical and other details pertaining to the storage cells shall be supplied including but not limited to the following: -

Rated voltage and ampere hour capacity of each storage cell has the rated discharge rate.

(i) Permitted maximum DOD.
(ii) Self-discharge rate.
(iii) Cycle life of the storage cell and the anticipated life (in years) of the battery bank.
(iv) Total number of storage cells in use.
(v) Details on cell interconnections, if any.
(vi) Self-discharge per month < 4% @27^{0}C.
(vii) Charge efficiency >93% @ 20% DOD (i.e. 80%SOC).
(viii) Topping-up frequency not more than once in 12 months after commissioning.
(ix) Supplied in dry charge condition.
(x) Insulated terminal connectors, fasteners, sealed floats and charge instruction card supplied.
(xi) Special micro-porous ceramic vent plugs.
(xii) Low antimony tubular positive plates.
(xiii) Rugged construction & Long Cycle life.

xiii The battery manufacturer shall have a valid BIS license for the offered battery model under the applicable Indian Standard (IS 1651 or IS 13369, as applicable).

xiv **Battery Rack for LMLA Battery-**
Battery rack for the battery bank of 2V cells should be of Metallic suitable for battery mounting & duly painted. Placement of battery should be such that maintenance of the battery could be carried out easily. The non-reactive acid proof mat should be provided to cover the entire floor space of the battery room.

b. Battery Bank - Technical Specifications for Tubular Gel (T-gel) Battery-

i Tubular positive plates for T-Gel - Proven cycling and deep cycling capabilities.

ii Gelled electrolyte for T-Gel with H_2SO_4 electrolyte - no stratification and no failure Partial State of Charge (PSOC)

iii Valve regulated - no water top up during service life

iv Antimony free alloy - longer shelf life because of very low self-discharge

v High pressure die-cast spine grids - rate of grid corrosion is very low & higher float life

vi Supplied in filled and charged condition - 100% capacity on first discharge

vii T-Gel batteries shall be installed only in the orientation recommended by the manufacturer (generally vertical)

2 Volts Tubular Plate Cell and 12 volts T-Gel Battery Technical characteristics

T-Gel Battery Technical Characteristics	
Service life:	Minimum05years"servicelifeupto50°Cfor2Volt
	Minimum 05 years service life up to 50°C for12 Volt
Cyclic Endurance:	as per IEC 61427 by a 3rd party
	as per IEC 60896-2 by a 3rd party
Design Cycle life: 2 Volt	2100 cycles at 80% Depth of Discharge at 27°C
	6000 cycles at 20% Depth of Discharge at 27°C
Design Cycle life: 12 Volt	1575 cycles at 80% Depth of Discharge at 27°C
	4500 cycles at 20% Depth of Discharge at 27°C
Conforming Standards:	Storage Batteries: -IS15549, IS16270, IS13369 &IS16046

Operating temperature:	Range: -20°C to +55°C (Optimum life can be obtained at an avg., of 31°C)
Operation	
Charger settings:	Chargers of constant potential & current limit type with temperature compensation are to be used
Standalone SPV System	Regulation Voltage: 2.3 to 2.4 ±0.005 V/cell at 25°C
	Charge Current Limit: up to 0.40 C 10A Max
SPVPP System	CREDA SPVPP Installation & Commissioning Tender Norms.

viii All technical and other details pertaining to the storage cells shall be supplied including but not limited to the following:-
Rated voltage and ampere hour capacity of each storage cell has the rated discharge rate.
(i) Permitted maximum DOD.
(ii) Self-discharge rate.
(iii) Cycle life of the storage cell and the anticipated life (in years) of the battery bank.
(iv) Total number of storage cells in use.
(v) Details on cell interconnections, if any.
(vi) Self-discharge per month <4%@27^{0}C.
(vii) Charge efficiency >93% @ 20% DOD (i.e.80%SOC).
(viii) Supplied in fully charged condition
(ix) Insulated terminal connectors, fastener sand charge instruction card supplied.
(x) Low antimony tubular positive plates.
(xi) Rugged construction & Long Cycle life.

ix Battery Bank-

The battery bank capacity shall be of different capacities as specified in the price schedule T-Gel battery. The general specifications shall be as under:
(i) The battery bank shall consist of required number of deep-discharge electro-Chemical storage cells, suitably interconnected as required. Parallel connections of storage cells will be discouraged.
(ii) The cells shall be capable of deep discharge and frequent cycling with long maintenance intervals and high columbic efficiency. Automotive or car batteries shall not be accepted.
(iii) The nominal voltage and capacity of the storage bank shall be selected and specified by the supplier in the bid.
(iv) The self-discharge rate of the battery bank or individual cell shall not exceed four (4) percent per month.
(v) The permitted maximum depth of discharge (DOD) shall be specified by the supplier in the bid.
(vi) Unless otherwise specified the cycle life of the battery shall not be less than 1500 DC discharged cycles between the fully charged state and the permitted maximum DOD at the rate of C/10. It should be able to deliver 80% of its rated capacity from fully charged position to DOD.
(vii) The cells shall include explosion proof safety vents.
(viii) The cells shall include the required number of corrosion resistant inter-cell connectors. Full instructions and technical details shall be provided.
(ix) The cells shall preferably be supplied in fully charged condition, complete with all required racks and connectors.

x Battery Rack-
Battery Bank must be supplied with necessary racks (duly acid-resistant powder coated with 9 tank process) & Heavy-duty copper connectors with Lead /Tin coating as required as per the GA drawing.

xi Tools Kit & testing equipment-
Necessary Tool kits shall be provided along with each battery bank for any immediate maintenance of batteries. The list of items is listed here: -

(i) Multimeter(10A)
(ii) Petroleumjelly-1/4Kg,
(iii) Rubber hand gloves-set
(iv) Spanner One Set
(v) Operation and instruction manual-Plastic coated Instruction manual

(vi) Clamp Meter(100A)

All above tools are necessary to be provided for each battery bank set more than 12 nos. in case of 2V cell batteries (at each site).The tool kit must be in a proper hard case and easy to carry.

03. POWER CONDITIONING UNIT (PCU) CUMINVERTER-

The Power conditioning unit (PCU) should have inbuilt charge controller and Inverter of capacity & ratings as specified in the Table for various capacity of Solar Power Plants. The PCU will have following features:

a. MOSFET/ IGBT based MPPT charging.

b. Output voltage 230V+2% of modified/ pure sine wave for single phase PCU & 415V+2% for three phase PCU.

c. Output frequency: 50 Hz+0.5Hz

d. Capacity of PCU/ Inverter is specified at 0.8 lagging power factor.

e. THD: less than3%

f. Efficiency: >90% of PCU at full load

g. Indicator: Array charger on Battery charging Inverter ON Load on solar/ battery Grid charger on load on Grid on Fault

h. Display parameters charging current Charging voltage of PV panels Output voltage Grid voltage Power output in KW Energy delivered in Kwh

i. MIMIC Diagram: To indicate power flow and operation of the charge controller/ battery charger; shall have provision for visual indications of existing power input/output through MIMIC diagram.

j. The PCU should be dual input type, where under normal condition the input is fed from a SPV panel and in the absence of SPV power or low SPV power conditions an external AC source can be used for battery charging. All these operation should be automatic. When battery bank is fully charged, the PCU should have the feature to feed the power generated from solar to load and draw the additional power from main supply to meet the load requirements in the case load is more than solar energy produced. The PCU continuously monitors the state of Battery Voltage, Solar Power output and the loads. Due to sustained usage of power, when the Battery Voltage falls below a preset level, the PCU will automatically transfer the load to the grid power and also charge the Batteries through the inbuilt Grid Charger. Once the batteries are charged to the present level, the PCU cuts off the Grid power from the system and will restore to feeding the loads from the battery bank & continue to charge the battery bank from the available solar power. The PCU always gives preference to the solar power and will use Grid power only when the solar power / battery charge is insufficient to meet the load requirement.

k. Full Protection against polarity reversal of PV array and battery, Over Current, Short Circuit, Deep Discharge, Input Surge Voltage, open circuit, accidental short circuit and night time leakage of current from battery to module.

l. Adequate protection against no-load, overload, short circuit, overheating, over-voltage, under-voltage and abnormal operating conditions. (i.e. when the system is ON & the load is removed).

The PCU charge controller must synchronize with Battery Management System (BMS).

m. The voltage setting for lead acid batteries shall be as follows –

Particular	For LMLA Battery	For T-Gel Battery
Bulk Voltage	2.60+/- 0.02V x no. of cell	2.40+/- 0.02V x no. of cell
Float Voltage	2.30+/- 0.02V x no. of cell	2.28+/- 0.02V x no. of cell
Load reconnect Voltage	2.16+/- 0.02V x no. of cell	2.20+/- 0.02V x no. of cell
Low Voltage disconnect	1.90+/- 0.02V x no. of cell	1.90+/- 0.02V x no. of cell

The PCU/ inverters should be tested from the MNRE / NABL /BIS /IEC accredited testing calibration laboratories.

04. Mandatory BIS/IEC Standard -

The BOS items / components of the SPV power plants/ systems deployed must conform to the latest edition of IEC/ Equivalent BIS Standards/ MNRE specifications / as specified below:

BOS ITEMS/SYSTEMS	Applicable BIS/Equivalent IEC Standard Or MNRE Specifications	
	Titel of Indian Standard	**Indian Standard**
Crystalline Silicon Terrestrial Photovoltaic (PV) Modules (Si wafer based)	Crystalline Silicon Terrestrial Photovoltaic (PV) Modules- Design Qualification and Types Approval Part 1 Test Requirements	IS 14286(Part 1): 2023/ IEC 61215-1: 2021
	Terrestrial Photovoltaic (PV) Modules- Design Qualification and Type Approval: Part 1, Test Requirement: Sec 1 Special requirement for testing of crystalline silicon photovoltaic (PV) modules	IS 14286 (Part 1/Sec1):2023/ IEC 61215-1-1:2021
	Photovoltaic (PV) Modules Safety Qualification Part 1 Requirement for Construction	IS/IEC 61730-1:2023
	Photovoltaic (PV) Modules Safety Qualification Part 2 Requirement for Testing	IS/IEC 61730-2:2023
Storage Batteries	General requirements & method of testing tubular lead acid / GEL/ maintenance free capacity test, charge/Discharge efficiency, self-discharge	For LMLA • **IS 1651** (2 V stationary tubular cells) • **IS 13369** (Tubular monobloc batteries) For Gel Batteries • **IS 16046**
	Secondary cells and batteries for SPV application, general- requirements and methods of test	IS 16270:2023
Power Conditioner/Inverters including MPPT and protection	Safety	IEC 62109-1 & IEC 62109-2
	Efficiency measurements	IEC 61683 and IS 16221 Part 2 (2015)
	Environment testing	IEC 60068-2(1,2,14,30)/equivalent BIS standard
Charge Controller/ MPPT Units	Environment Testing	IEC 60068-2(1,2,14,30)/equivalent BIS standard
Cables	General test and measuring method PVC insulated cables for working voltage up to and including 1100V and UV resistant for outdoor installation	IEC 60227/IS 694, IEC 60502/IS 1554(Part I & II), IEC 62930 / EN 50618 for PV DC cables
Switches/Circuits/Breaks/connectors	General requirements connectors –safety AC/DC	IEC 60947 part I,II,III/IS 60947 PART I,II,III/EN 50521
Junction boxes/enclosures for invertors/charge	General requirements	IP 54(for outdoor)/IP21 9for indoor) as per IEC 60529
surge protection	-	IEC 61643-11
ACDB/DCDB	-	IEC 61439

**In case if the Charge controller is in-built in the inverter, no separate IEC 62093 test is required and must additionally conform to the relevant national/international Electrical Safety Standards wherever applicable.

05. MODULE MOUNTING STRUCTURE-

a. The module & frame structure shall be mild steel, hot dipped galvanized (80 micron) with corrosion resistant painting for holding the PV modules.

b. Each panel frame structure shall be so fabricated as to be grouted on ground on its legs.

c. Anti-Theft Nut Bolts of SS (with washers) should be used for mounting modules for better theft proofing. Regarding civil structures. The bidder needs to take care of the load baring capacity of the roof and need to arrange suitable structures based on the quality of roof.

d. The total load of the structure (when installed with PV modules) on the terrace should be less than 60kg/m^2.

e. The minimum front clearance of the structure from the roof level should be 450mm.

f. The legs of the structures made with hot dip GI angles will be fixed and grouted in the RCC foundation columns made with 1:2:4 cement concrete. The foundation should be as per design of structure to withstand maximum wind loading.

g. There shall be a minimum air gap of 3 +/- 0.3cm between the facing edges of two adjacent modules on all sides.

h. Each panel frame structure shall have inclination between 20- 40 degrees depending on the site location seasonal load requirement. A weather proof junction box as per the relevant ISI specifications, to be provided where the module terminals shall be interconnected and output taken.

i. All nuts' bolts, and fasteners should be made of stainless steel.

j. The structure should be designed to allow easy replacement of any module and shall be aligned with site requirement.

k. The structure should be designed for simple mechanical and electrical installations.

l. It will be designed to withstand severe cyclone/ storm with the speed max.150 Km/hr (Analysis may be carried out using STAAD.Pro or equivalent structural analysis software.)

m. The systems should be installed at ground level / roof top at least the height of 450mm with a CC block of 300x300x300 mm with each support.

06. ELECTRICAL CONNECTIONS-

All DC and AC cables shall be of electrolytic grade annealed copper conductor, flame-retardant, UV-resistant (for outdoor use), FRLS/FRLSH (for indoor use), and shall conform to the latest applicable BIS/IEC standards. The DC Solar PV cables shall conform to IEC 62930 or EN 50618, wherever applicable. AC power cables shall conform to IS 694 and/or IS 1554 (Part 1) or equivalent BIS standards.

A suitable connection point shall be provided to the consumer from PCU, at a distance not more than 05 meters, from where consumer shall have its own wiring to the use points.

07. ARRAY JUNCTION BOXES-

The junction boxes for SPVPP are to be provided in the PV array for termination of connecting cables. The Junction Boxes (JBs) shall be made of GRP/FRP/Powder Coated Aluminum /cast aluminum/ ABS/ Polycarbonate alloy with full dust, water & vermin proof arrangement. All wires/cables must be terminated through cable lugs. The JBs shall be such that input & output termination can be made through suitable cable glands.

Copper bus bars/terminal blocks housed in the junction box with suitable termination threads Conforming to IP65 standard and IEC 62208 Hinged door with EPDM rubber gasket to prevent water entry. Each Junction Box shall have High-quality Suitable capacity Metal Oxide Varistors (MOVs) / SPDs, suitable Reverse Blocking Diodes. The Junction Boxes shall have suitable arrangement monitoring and disconnection for each of the groups. Suitable markings shall be provided on the bus bar for easy identification and the cable ferrules must be fitted at the cable termination points for identification. For systems below 6 kW, suitably rated weatherproof junction boxes conforming to IP65 shall be provided. DC DPBs shall have sheet from enclosure of dust & vermin proof conform to IP 65 protection. The bus bars are made of copper of desired size. Suitable capacity MCBs/MCCBs shall be provided for controlling the DC power output to the PCU along with necessary surge arrestors AC Distribution Panel Board (DPB) shall control the AC power from PCU/ inverter, and should have necessary surge arrestors. Interconnection from ACDB to

consumer main power board.

All switches and the circuit breakers, connectors should conform to IEC 60947, part I, II and III/IS60947 part I, II and III. The changeover switches, cabling work should be undertaken by the bidder as part of the project. All the Panels shall be metal clad, totally enclosed, rigid, floor mounted, air insulated, and cubical type suitable for operation on three phase/single phase. The panels shall be designed for minimum expected ambient temperature of 55^0 Celsius, 80% humidity and dusty weather. All indoor panels will have protection of IP54 or better. All outdoor panels will have protection of IP65 or better should conform to Indian Electricity Act and rules (till last amendment). Connecting cables PVC insulated copper cables (ISI marked) for: The cable should be used as per site considering the maximum permissible loss up to 2%, however for 4 KW plant the minimum cable should be as follows: -

Module interconnections (4.0 mm copper single core multi strand),

Module parallel interconnection (10 mm copper single core multistrand)

Array or AJB to PCU (16 mm copper two cores)

Battery to PCU (16 mm copper single core multi strand) might be double cables if required PCU to load/change over switch (Single core copper cable 6.0 mm multi strand) as per requirement of site.

08. LIGHTNING AND OVER VOLTAGEPROTECTION-

The SPV Power Plant shall be provided with lightening and over voltage protection. The principal aim in this protection is to reduce the over voltage to a tolerable value before it reaches the PV or other sub-system components. The source of over voltage can be lightening or any other atmospheric disturbance. The Lighting Arrestor (LA) is to be made of 1¼" diameter (minimum) and 12 feet long GI spike or should be designed as per IS/IEC 62305 based on a Lightning Risk Assessment on the basis of the necessary meteorological data of the location of the projects. Necessary foundation for holding the LA is to be arranged keeping in view the wind speed of the site and flexibility in maintenance in future. Each LA shall have to be earthed through suitable size earth bus with earth pits. The earthing pit shall have to be made as per IS 3043. LA shall be installed to protect the array field, all machines and control panels installed in the control rooms. Number of LA shall vary with the capacity of SPV Power Plant &location.

09. SURGE PROTECTION DEVICE-

The SPV Power Plant shall be provided with Type II DC Surge Protection Devices (SPDs) conforming to IEC 61643-31. Where an external Lightning Protection System (LPS) is installed, Type I+II SPDs shall be provided as applicable. The SPD shall employ MOV or equivalent technology and shall be provided with an integral thermal disconnector, short-circuit protection, and visual status indication. The SPD shall have a nominal discharge current (In) of not less than 10 kA (8/20 µs) and a maximum discharge current (Imax) of not less than 20 kA (8/20 µs), or higher as required by the system design. The Maximum Continuous Operating Voltage (Uc) shall be suitable for the maximum PV system voltage. The Voltage Protection Level (Up) shall comply with IEC 61643-31.

10. EARTHING PROTECTION-

The earthing system shall be designed, installed, tested, and maintained in accordance with the latest editions of IS 3043 (Code of Practice for Earthing), IS/IEC 62305 (Lightning Protection), and CEA (Measures relating to Safety and Electric Supply) Regulations, 2023, as

amended from time to time.

Chemical earthing electrodes shall be provided for the SPV Power Plant. The type, size, length, and number of earthing electrodes shall be selected based on the site soil resistivity, fault level, and design requirements to achieve the specified earth resistance in accordance with IS 3043. Where a single electrode is not sufficient to achieve the required earth resistance due to hard rock or other site constraints, additional electrodes or suitable earthing arrangements shall be provided as per IS 3043. The earth resistance of each earthing system shall not exceed 5 Ohms, or a lower value if required by the applicable standards or equipment manufacturer's recommendations. Each Module Mounting Structure (MMS), Power Conditioning Unit (PCU), Battery Bank (where applicable), DC Distribution Board (DCDB), AC Distribution Board (ACDB), Lightning Protection System (LPS), control panels, and all exposed non-current-carrying metallic parts shall be connected to the earthing system. Provision shall be made for safe isolation, grounding, and short-circuiting of the PV array during maintenance, wherever applicable. The earthing conductors shall be Hot Dip Galvanized (HDG) GI strips/GI conductors or copper strips/copper conductors, as per the approved design and IS 3043. All joints shall be mechanically robust and protected against corrosion. The number and location of earthing electrodes shall be determined based on the earthing design, equipment to be protected, soil conditions, and the requirement to achieve the specified earth resistance, and shall not be based solely on the capacity of the SPV Power Plant. The Lightning Protection System (LPS) shall be designed and installed in accordance with IS/IEC 62305. The number, type, and location of air terminals (lightning arrestors) shall be determined through a site-specific lightning risk assessment and the required protection radius. The Lightning Protection System shall be connected to a dedicated earthing system in accordance with IS 3043. All earthing connections shall be properly identified, securely terminated using suitable lugs/clamps, and made accessible for inspection, testing, and maintenance.

11. DC DISTRIBUTION BOARD (DCDB)-

This shall consist of suitable powder coated metal casing. In this box a separate arrangement which shall consist of MCCBs of suitable specifications & which can withstand respective flow of current, with the purpose of providing the option for isolating the battery bank & SPV arrays should be made. There shall be copper bus bars of suitable rating. Proper rating HRC fuse & MCCB/Isolator for DC application should be suitably installed in DCDB as battery bank isolator. Best quality Ah meter has to be installed to measure the cumulative charging & discharging status of battery bank. In DC circuits AC MCB or MCCB shall not be permitted. As per drawing attached. Volt meter/ Amp meter to measure charging and discharging current/voltage. The DCDB shall be designed, manufactured, tested, and installed in accordance with the latest applicable editions of **IEC 61439-1 & IEC 61439-2**, **IEC 60947 (Part 2 & Part 3)**, **IEC 61643-31**, **IEC 60529.**

12. AC DISTRIBUTION BOARD (ACDB)-

This shall consist of box of suitable powder coated metal casing. One feeder per phase shall be provided in ACDB with MCB of suitable capacity installed at each feeder in the ACDB. One BIS-certified energy meter conforming to IS 16444 / IS 15959, as applicable (Single / Three Phase) of good quality shall also be installed in ACDB suitable placed to measure the consumption of power from SPV Power Plant. Proper rating MCB shall be installed at every feeder (in case of single-phase output also, there shall be three feeders) to protect feeders from the short circuit current as per the requirement of the site & instructions of CREDA. A separate dedicated feeder from conventional/grid line to PCU as well as ACDB should also be installed, if required as per CREDA's instruction. A separate change over switch of proper rating should also be suitably installed in the ACDB to isolate the existing connected load from the Solar System & cater the power to the existing load from conventional power

(Grid), in case of emergency. ACDB should be connected between PCU & Load. Separate Electronic Energy Meters should be installed for incoming and outgoing circuits of ACDB for SPVPPs of capacity more than or equal to 1 kWp. One no. of Timer for suitable capacity with connector and SPD of suitable Capacity for Lightening protection shall be installed.

13. DANGER BOARDS-

Danger boards should be provided as and where necessary as per IE Act/IE Rules as amended up to date as per the instructions of CREDA & affixed at various appropriate locations.

14. CABLES/WIRE-

All cables should be of copper as per IS and should be of 650V/1.1 KV grade as per requirement. All connections should be properly made through suitable lug/terminal crimped with use of suitable proper cable glands. The size of cables/wires should be designed considering the line loses, maximum load on line, keeping voltage drop within permissible limit and other related factors. The cable/wire should be of ISI/BIS mark for overhead distribution, with prior approval of CREDA. For normal configuration the minimum suggested sizes of cables are:

Module to module/SJB/AJB	4 sq mm (single core)
AJBs to MJBs/DCDB	16 sq mm (two core), with respect to current ratings of designing
MJBs to DCDB	minimum 50 sq mm (single core) or as per design & rating
DCDB to PCU	minimum 50 sq mm (single core), or as per design & rating
Battery to BPP	minimum 50 sq mm (single core) or as per design & rating
BPP to DCDB	minimum 50 sq mm (single core) or as per design & rating
DCDB to PCU	minimum 50 sq mm (single core) or as per design & rating
PCU to ACDB	as per design & rating

The size & rating of the cables may vary depending on the design & capacity of SPV Power Plant. Follow the attached drawing. Bidder should compulsorily get the design & rating of the cables approved from CREDA prior to the installation. Bidder has to provide certificate cable used in SPVPP.

15. JUNCTION BOXES-

Junction Boxes shall be mounted on poles of array support structure. The junction boxes should be made of FRP ((IP65),with prior approval of CREDA). It should be provided with proper locking arrangements.

16. TOOL KIT-

Complete tool kit other then battery tool kit with tool box for complete maintenance and operation including spanner, screw driver, wire cutter, nose player, player, hammer etc.

17. DATA ACQUISITION SYSTEM / PLANTMONITORING-

a. Data Acquisition System shall be provided for each of the solar PV plant having capacity 10 KW or above.

b. Data Logging Provision for plant control and monitoring, time and date stamped system data logs for analysis. Metering and Instrumentation for display of systems parameters and status indication to be provided.

c. Solar Irradiance: An integrating Pyrometer / Solar cell based irradiation sensor (along with

calibration certificate) provided, with the sensor mounted in the plane of the array. Readout integrated with data logging system.

d. Temperature: Temperature probes for recording the Solar panel temperature and/or ambient temperature to be provided complete with readouts integrated with the data logging system

e. The following parameters are accessible via the operating interface display in real time separately for solar powerplant:

i. AC Voltage.
ii. AC Output current.
iii. Output Power
iv. Power factor.
v. DC Input Voltage.
vi. DC Input Current.
vii. Time Active.
viii. Time disabled.
ix. Time Idle.
x. Power produced

18. OTHER FEATURES-

A toll-free number (i.e. 1800 12345 91) of IVRS of CREDA and CONTACT NUMBER OF TECHNICAL PERSON INSTALLATION AGENCY of minimum computer font size 72 or 13 mm is to be embossed/ punch in front of battery box by contractor/ bidder, which in case of non- working/operational problems etc of system will be dialed by the beneficiary etc to lodge a complaint in respect of system problems. The IVRS will divert the complaint to Contractor/ bidder through E mail, SMS etc. The contractor/ bidder will have to rectify the same to make/ restore the system to working position within 72 hours in the warrantee period of 5 years, failing which the system may be get rectified on contractor/ bidder cost and the cost will be recovered by contractor/ bidders pending claims what so ever and appropriate action as per noncompliance etc of agreement will be considered/taken.

19. INSTALLATION OF SYSTEM-

The system should be properly installed at site. The SPV module mounting structure should be properly grouted depending upon the location and requirement of the site. The grouting should be such that it should withstand the maximum wind speed /storm. Adequate space should be provided behind the PV module/array for allowing un-obstructed air flow for passive cooling. Cables of appropriate size should be used to keep electrical losses to a bare minimum. Care should be taken to ensure that the battery is placed with appropriate leveling on a structurally sound surface. All wiring should be in a proper conduit or capping case. Wire should not be hanging loose. Any minor items which are not specifically included in the scope of supply but required for proper installation and efficient operation of the Solar Power Generator/Plant system, is to be provided by the manufacturer as per standards.

20. ELECTRIC CABLE-

All the cables shall be supplied conforming to IEC 60227– IS 694 / IS 1554 – IS / IEC 60502 shall be of 650 V/1.1 kV grade as per requirement. Only PVC copper cables shall be used.

21. WARRANTY-

The mechanical structures, electrical works including power conditioners/inverters/charge controllers/ maximum power point tracker units/distribution boards/digital meters/ switchgear/ storage batteries, etc. and overall workmanship of the SPV power generator/Plant system must be warranted against any manufacturing/ design/

installation defects for a minimum period of 5years.

22. TRACEABILITY OF THE PRODUCT TO BESUPPLIED-

In order to prevent the misuse of the product such as unauthorized sale or diversion to the open market, the following incorporation shall be made in the product. Engraving (or) Screen printing of CREDA at a suitable place on the main components viz SPV Panel, battery, PCU to be used in the installation of the solar power plant.

23. SPEICIFICATIONS OF ELEVATEDSTRUCTURES-

Module Mounting Structures (MMS) are used to secure the PV modules in particular orientation to harness maximum sunlight. MMS are designed keeping several structural considerations such as:

a) Load (weight) of the PV system.
b) Typical and maximum wind loads at that location.
c) Seismic zone safety factors
d) Other considerations such as saline or corrosive environments.
e) Most of the physical considerations are governed by Indian Standards. PV modules are often mounted at a tilt angle equal to that of the latitude of the location.

Also other important structural considerations such as:

a) Supply, installation, erection, and acceptance of module mounting structure (MMS) with all necessary accessories, auxiliaries, and spare part.
b) Module mounting structures can be made from Hot Dip Galvanized Iron and specification and Zinc Coating 80 Microns/610 gm Per Sq.m.
c) MMS Steel shall be as per latest IS 2062:2011 and galvanization of the mounting structure shall be in compliance with latest IS 4759.
d) All bolts, nuts, fasteners shall be of stainless steel of grade SS 304 or hot dip galvanized. Structural material shall be corrosion resistant and electrolytically compatible with the materials used in the module frame, its fasteners, nuts, and bolts.
e) The module mounting structures should have angle of inclination as per the site conditions to take maximum insolation and complete shadow-free operation during generation hours. However, to accommodate more capacity the angle of inclination may be reduced until the plant meets the specified performance ratio requirements.
f) The Mounting structure shall be so designed to withstand the speed for the wind zone of the location where a PV system is proposed to be installed. The PV array structure design shall be appropriate with a factor of safety of minimum 1.5.
g) The upper edge of the module must be covered with a windshield so as to avoid air ingress below the module. Slight clearance must be provided on both edges (upper & lower) to allow air for cooling.
h) Suitable fastening arrangements such as grouting, and calming should be provided to secure the installation against the specific wind speed. The Inspecting Agency shall ensure that the SPV System withstand high wind velocity within the guarantee period as per technical specification.
i) The structures shall be designed to allow easy replacement, repairing and cleaning of any module. The array structure shall be so designed that it will occupy minimum space without sacrificing the output from the SPV panels. Necessary testing provision for MMS to be made available at site.
j) Adequate spacing shall be provided between two panel frames and rows of panels to facilitate personnel protection, ease of installation, replacement, cleaning of panels and electrical maintenance.
k) The structure shall be designed to withstand operating environmental conditions for a period of minimum 25 years.

a. **Specification of Elevated Parking Structure with Control Box for 1 KWSPVPP-**

i Steel Should be used – IS2062Grade-A.
ii All Weld Must be6mm.
iii All Fabrication should be completed before hot dip galvanized.
iv Hot Dip Galvanizing should be as per Relevant IS.
v Specification and Zinc Coating 80 Microns/610 gm Per Sq.m.

b. **Specification of Elevated Parking Structure with Control Room for 2KWSPVPP-**

i Steel Should be used – IS2062Grade-A.
ii All Weld Must be6mm.
iii All Fabrication should be completed before hot dip galvanized.
iv Hot Dip Galvanizing should be as per Relevant IS.
v Specification and Zinc Coating 80 Microns/610 gm Per Sq.m.

c. **Specification of Elevated Parking Structure with Control Room for 3.0 KWSPVPP-**

i Steel Should be used – IS2062Grade-A.
ii All Weld Must be6mm.
iii All Fabrication should be completed before hot dip galvanized.
iv Hot Dip Galvanizing should be as per Relevant IS.
v Specification and Zinc Coating 80 Microns/610 gm Per Sq.m.

d. **Specification of Elevated Parking Structure with Control Room for 4 KWSPVPP-**

i Steel Should be used – IS2062Grade-A.
ii All Weld Must be6mm.
iii All Fabrication should be completed before hot dip galvanized.
iv Hot Dip Galvanizing should be as per Relevant IS.
v Specification and Zinc Coating 80 Microns/610 gm Per Sq.m.

e. **Specification of Elevated Parking Structure with Control Room for 6.0 KWSPVPP-**

i Steel Should be used – IS2062Grade-A.
ii All Weld Must be6mm.
iii All Fabrication should be completed before hot dip galvanized.
iv Hot Dip Galvanizing should be as per Relevant IS.
v Specification and Zinc Coating 80 Microns/610 gm Per Sq.m.

f. **Specification of Elevated Parking Structure with Control Room for 9.0 KWSPVPP-**

i Steel Should be used – IS2062 Grade-A.
ii All Weld Must be6mm.
iii All Fabrication should be completed before hot dip galvanized.
iv Hot Dip Galvanizing should be as per Relevant IS.
v Specification and Zinc Coating 80 Microns/610 gm Per Sq.m.

g. **Specification of Elevated Parking Structure with Control Room for 10KWSPVPP**

i Steel Should be used – IS2062 Grade-A.
ii All Weld Must be6mm.
iii All Fabrication should be completed before hot dip galvanized.
iv Hot Dip Galvanizing should be as per Relevant IS.
v Specification and Zinc Coating 80 Microns/610 gm Per Sq.m.

24. WARRANTYAND MAINTENANCE-

a. The PV modules will be warranted for a minimum period of 25 years from the date of supply. (Output wattage should not be less than 90% at the end of 10 Years and 80% at the end of 25 years).

b. The mechanical structures, electrical components including battery and overall workmanship of the complete Solar PV Power Pack must be warranted against any manufacturing/ design/ installation defects must be warranted for a minimum of 5 years from the date of commissioning and handing over of the system.

c. The Comprehensive Maintenance (within warranty period) shall be executed by the firm themselves or through the authorized dealer/ service centre of the firm in the concerned district. Separate work order shall be issued by CREDA for the CMC.

d. It is mandatory for the Bidder/contractor to open an authorized service center in the concerned area before the supply/ installation of the system.

e. Necessary maintenance spares for five years trouble free operation shall also be supplied with the system.

f. The supplier shall be responsible to replace free of cost (including transportation and insurance expenses) to the purchaser whole or any part of supply which under normal and proper use become dysfunctional within one month of issue of any such complaint by the purchaser.

g. The Comprehensive Maintenance (within warranty period) will include the total system including Battery etc whatsoever at site.

h. It is an essential part of the contract that the bidder shall provide warranty of the system for 5years. During the warranty following maintenance will required to be carried out by the contractor.

i. Quarterly checking up keeping and replacement of the any component or subcomponents of the system for proper operation of the system.

j. Repairing/replacement of all defective components and sub-components including battery of the system as per the requirement to ensure proper operation of the system.

k. The scope of work includes repairing/replacement of power plant to make the system functional within warranty period whenever a complaint is lodged by the user at site. The contractor shall attend the same within a week. Apart from this any complaint registered/ service calls received / faults notified in the report generated by the IVRS should be attended to and the system should be repaired/ restored/ replaced within 4days.

l. In case of any damage or breakage of the component due to negligence or fault of beneficiary or theft etc, the same shall be replaced at users cost.

m. In case of Solar PV module damaged due to natural calamity, contractor shall replace the same at his own cost, if required during warranty period.

n. The safety and security of the system shall be sole responsibility of the use.

SECTION -5

ANNEXURES, SPECIFICATIONS, FORMS

ANNEXURE – I

(EXPERIENCE CERTIFICATE ON THE OFFICIAL LETTER HEAD OF CONCERNED GOVERNMENT DEPARTMENT WITH SEAL AND SIGN BY AUTHORIZEDSIGNATORY)

Ref.No.…….....……. Date……....……..

CERTIFICATE OF COMPLETION - OFF GRID SPV POWER PLANTS

This is to certify that **Name of Bidder, Address of Registered Office** has successfully completed the work of design supply, installation & commissioned of.....Nos. Off-grid SPV power plants (……. Scheme) against various Sanction of Name of Agency at various locations in …..……. State, as per following details–

S.no	Capacity of Solar Power Plants	Year & Scheme	Total no. System	Remarks
	Total -			

This workmanship and performance of the above installed systems are found satisfactory and are in successful operation.

Seal & Sign
(Authorized Signatory)

ANNEXURE-II

CONSORTIUM AGREEMENT

This Consortium Agreement executed on this ……. Day of …….. 2026

BETWEEN

M/S ……., a Company/Proprietorship Firm/Partnership Firm incorporate under the Law of companies Act 1956/2013 and having its registered/principal office at ……. (GST No…….) through its proprietor ……. S/o ……. (herein after called the "Partner-I"/ "Lead Partner" which expression shall include its successors, executors and permitted assigns)

AND

M/s …… a Company/Proprietorship Firm/ Partnership Firm under Firm (GST No. ……) and having its registered/principal office at ……. Through its Partner Mr. ……. S/o …… (herein after called the "Partner–II"/ "Second Partner" which expression shall include its successors, executors and permitted assigns)

This Agreement is for the purposes of submission Bid as per the **Bid document no. 5363 Date 31.07.2026** and entering into a contract in case of award for the work of supply, installation and commissioning of solar photo voltaic power plant of various capacity with LMLA & T-GEL battery bank with off-grid PCU with five years CMC, on site warrantee anywhere in the state of Chhattisgarh.

AND WHEREAS as per Bid document, Consortium bids will also be considered by the Owner provided they meet the specific requirements in that regard.

NOW THIS INDENTURE WITNESSETH AS UNDER –

In consideration of the above premises and agreements all the partners to this Consortium do hereby now agree as follows:

1. We the partners in the Consortium hereby confirm that the name and style of the Consortium shall be **"…… / ……"** "Consortium."
2. **FORMATION AND PRINCIPAL PLACE OF BUSINESS**

FORMATION –

The partner of the consortium does hereby form a Consortium pursuant to the laws of state of Chhattisgarh in order for the consortium to carry on the purposes for which provision is made herein.

PRINCIPAL PLACE OF BUSINESS –

The Consortium Partner shall maintain principal place of business at ……. The partners of the consortium may re-locate its office from time to time or have additional offices as the partners may determine

3. **PURPOSE OF THE CONSORTIUM –**

The object of the consortium to bid and perform Bid Document No 5363 Dated 31.07.2026 from CHHATTISGARH STATE RENEWABLE ENERGY DEVELOPMENT AGENCY (CREDA) For supply, installation and commissioning of solar photo voltaic power plant of various capacity with LMLA & T-GEL battery bank with off-grid PCU with five years CMC, on site warrantee anywhere in the state of Chhattisgarh and to deal with the same in any manner what so ever.

4. **TERM –**

The term of the consortium shall commence as of the date hereof and shall be terminated and dissolved upon the earliest to occur of (i) on mutual understanding of partners by executing separate agreement regarding dissolution of consortium (ii) the unanimous agreement of the partners (iii) the order of a court of competent jurisdiction (iv) Competition of the above mention Bid.

5. **PERCENTAGE OF PARTICIPATION –**

CONSORTIUM PARTNER	PARTNER	PERCENTAGE
1) M/S ……..	LEAD PARTNER (PARTNER-1)	……..
2) M/S ……..	OTHER PARTNER (PARTNER-2)	……..
TOTAL		

6. PARTICIPATION –

Both the partners have decided to perform the above mention work of CREDA in their above proportionate work.

7. The Lead Member is hereby authorized by the second Member of the Consortium to bind the Consortium and receive instructions for and on their behalf. For this purpose, second member will submit a duly signed Power of Attorney.

8. The lead partner of consortium will be solely responsible for any liability, penalty, CMC and other terms and conditions mentioned in this tender document.

9. The Lead Member shall be liable and responsible for ensuring the Solar Power Plant and collective commitment of each of the members of the Consortium in discharging all of their respective obligations. Furthermore, lead member shall be liable for fulfilment of each term and conditions of the Bid of its part of the obligations without in any way limiting the scope of collective liability.

10. Subject to the terms of this Agreement, the whole member shall be responsible for providing technical and financial support and responsible equally for execution of project as per agreement to be signed.

11. Both the Partners shall be jointly responsible for Project Management of works.

12. In case of any breach of the said Contract by any of the partners of the CONSORTIUM, we hereby agree to be fully responsible for the successful execution/performance of the Contract in accordance with the terms of the Contract.

13. Further, if the Owner suffered any loss or damage on account of any breach of the Contract or any shortfall in the completed equipment/ plant, meeting the guaranteed performance parameters as per the technical specifications/contract documents, the Lead Partner and Second Partner of these presents undertake to promptly make good such loss or damage caused to the Owner, on the Owner's demand without any demure.

14. The financial liability of the partners to this Consortium Agreement, to the Owner with respect to the any or all claims arising out of the performance or non-performance of the Contract shall, however be not limited in any way so as to restrict or limit the liabilities of either of the partner.

15. This Consortium Agreement shall be governed, construed and interpreted in accordance with Laws of India. Courts of Raipur (C.G.) shall have exclusive jurisdiction in all matters arising there under.

16. It is further agreed that this CONSORTIUM Agreement shall be irrevocable and shall form an integral part of the Contract and shall continue to be enforceable till the Owner discharges the same. It shall be effective on the date first above mentioned for all purposes and intents.

IN WITNESS WHEREOF, the partners to this Consortium agreement have, through their respective authorized representatives, have executed these presents and affixed their hands and common seal of their respective companies on the day, month and year first above mentioned.

FOR, M/s ……	**FOR, M/s…….....……**
(MR. ……)	(MR. ……..)
Lead Partner/Partner-1	Other Partner/Partner-2
WITNESS -	WITNESS –
1……..	1……..
2……..	2……..

ANNEXURE – III

FORMAT FOR THE AFFIDAVIT

(Declaration of conflict of Interest)

(Note: This affidavit should be on a non-judicial stamp paper of Rs. 100/- and shall be attested by Magistrate/Sub-Judge/ Notary Public)

I,……. (Name of the bidder authorized representative of the bidder) son/ daughter of…… resident of …… …… (full address), aforesaid solemnly affirm and state as under:

1. I hereby certify that all the information furnished with the bid submitted in response to Tender/bid no. 5363/CREDA/SPV-PP/2026-27 DATE-31-07-2026 issued by Chhattisgarh State Renewable Energy Development Agency (CREDA) (authority inviting bids) for Supply, Design, Installation, and Commissioning of Solar Photovoltaic power plant of various capacity with LMLA & T-GEL battery bank with off-grid PCU with five years CMC, onsite warrantee for anywhere in the State of Chhattisgarh (name and identification of work) are true and correct.

2. I hereby certify that I have been authorized by..... (Company name) to sign on their behalf, the bid mentioned in Sr.No.1 above. *

3. Information furnished in the bidding documents is correct in all respects to the best of my knowledge and belief.

4. The near relations, as per clause 29(a) in Section - 02, in CREDA, are not in employment of the firm/company. (Note: -By the term near relatives is meant Wife, Husband, Parents and Son, Brother, Sister, Brother–in-law, Father-in-law, Mother-in-law etc.) (if working mention the name/names)
……..…….
…….

5. The name of near relative (if any) as per Clause 31(b) who retired/removed within the last two years. (If None, clearly State None)
……..…….
……..…….

6. No near relative is working as Financial Accountant in the CREDA. (if working mention the name)
……..…….
……..…….

7. No person is working in the company in any capacity, who are near relatives to any Officer in Chhattisgarh State Renewable Energy Development Agency (CREDA) (If working mention the name)
……..…….
……..…….

8. Our company/firm/ or otherwise is not under the clarification of ineligibility for corrupt and fraudulent practices by the Central Government, the State Government or any public undertaking, autonomous body, authority by whatever name called under the Central or the State Government as mention in clause 1(f) of tender document.

9. I hereby authorize the CREDA Officials to get all the documents verified from appropriate sources (s).

Deponent

Place: …….
Date: ……

* Not applicable if the bidder is an individual and is signing the bid on his own behalf.

Verification

I……. S/o……do here by affirm that contents stated in Para 1 to 9 above and contents submitted in technical & financial bid are true to the best or my knowledge and believe and are based on my/our record.

Verified that this date of …… at (Place)…….

Deponent

ANNEXURE – IV

Drawing Section

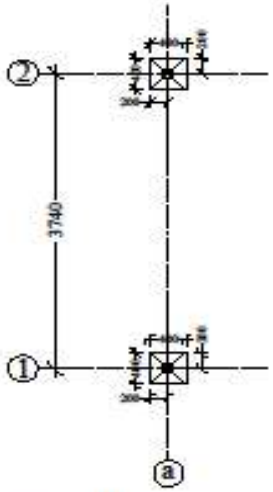

COLUMN CENTERLINE PLAN

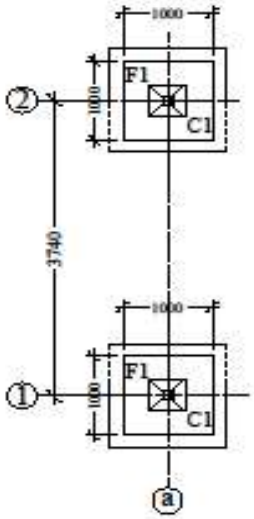

FOOTING CENTERLINE PLAN

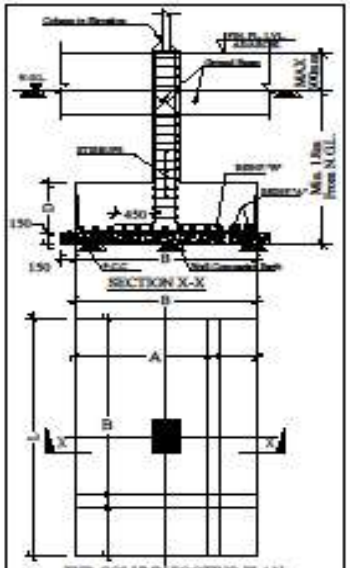

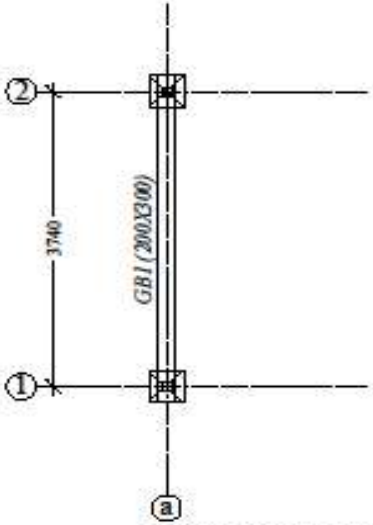

GROUND BEAM PLAN

COLUMN SCHEDULE (M20:Fe500)

UP-TO TOP	M20 : Fe500
	LINKS
	2L-8#@175mm c/c
	400 × 400
	•T16 •T12
	4-T16+4-T12
SIZE	400 X 400
COLUMN MARKED	C1

GROUND BEAM DETAIL

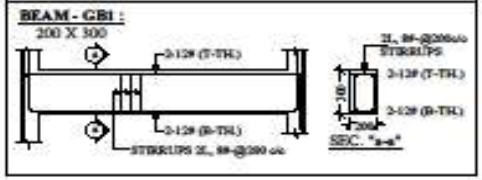

FOOTING SCHEDULE (M20:Fe500)

FOOTING NUMBERS	FOOTING TYPE	FOOTING SIZE		D	BOTTOM REINFORCEMENT		TOP REINFORCEMENT	
		L	B		MAIN	DIST.	MAIN	DIST.
F1	BOX	1000	1000	375	T10-@150c/c	T10-@150c/c	T10-@250c/c	T10-@250c/c

GENERAL NOTES

1. ALL DIMENSIONS ARE IN MM ONLY WRITTEN DIMENSION ARE TO BE FOLLOWED. DIMENSIONS IN STRUCTURAL DRAWING SHOULD NOT BE SCALED.
2. STRUCTURAL DRAWING SHOULD BE READ IN CONNECTION WITH RELEVANT ARCHITECTURAL DRAWING, IN CASE OF DISCREPANCY BETWEEN ARCHITECTURAL AND STRUCTURAL DRAWING SHOULD BE IMMEDIATELY BROUGHT TO NOTICE OF CONSULTANT.
3. M-20(MIX- DESIGN MIX CONCRETE AND TMT BARS (FE500) SHALL BE USED IN CONSTRUCTION.
4. TIES SHOULD BE BEND INDEN WITH 135 LENGTH, ANGLE 135° IN BEAM & COLUMN.

REINFORCING STEEL

1. ALL REINFORCING STEEL WILL BE OF TESTED QUALITY CONFORMING TO IS: 1786 LATEST.
2. REFER TO HIGH YIELD STRENGTH DEFORMED BARS WITH CHARACTERISTIC STRENGTH OF 500N/SQ.MM.
3. THE CLEAR COVER TO REINFORCEMENT SHALL BE AS FOLLOWS.

FOUNDATION	50MM,	WALL	30 MM
COLUMNS	40MM,	FLOOR BEAM	30MM
GRADE/TIE BEAM	30MM,	SLABS	20MM*

* COVER TO SECONDARY REINFORCEMENT ALSO SHALL NOT BE LESS THAN 20MM.

4. LAP LENGTH TO BE 50 DIA OF BAR MINIMUM.
5. SLAB BARS IN SHORTER DIRECTION SHALL BE BELOW BARS FOR THE LONGER DIRECTION.
6. IN BEAMS, FIRST STIRRUP SHALL BE AT NO MORE THAN 50MM FROM FACE OF THE SUPPORTING MEMBER.
7. IN BEAMS TOP BARS ARE NOT TO BE SPLICED IN THE END QUARTERS OF THE SPAN, AND THE BOTTOM BARS ARE NOT TO BE SPLICED AT MIDDLE HALF OF THE SPAN.

STEEL WORK

1. USE ALL INDIAN STANDARD ROLLED SECTION.
2. IF THERE ANY JOINTS IN LONG MEMBERS NOT TO BE PROVIDED AT CENTRE AND TO BE PROVIDED FOR FULL STRENGTH.
3. ALL EDGES AND ENDS TO BE MACHINE CUT.
4. ALL HOLES TO BE DRILLED (NOT PUNCHED) 1.5MM LARGER IN DIAMETER THAN THAT OF BOLTS.
5. ALL CLEAT OF ANGLE SECTION TO BE 150A.
6. ALL WELDS TO BE PROVIDED (5MM. FILLET) FOR FULL STRENGTH.
7. ALL COVER & STIFFENING PLATE ARE OF 6 MM THICK.
8. FOLLOW : IS :800-2007 FOR STEEL WORK.
9. YIELD STRENGTH :-250 N/MM2
10. ALL COVER & STIFFENING PLATE ARE OF 6MM THICK.
11. FOLLOW :IS:2062 FOR HOT ROLLED MEDIUM AND HIGH TENSILE STRUCTURAL STEEL SPECIFICATION.
12. FOLLOW: IS: 1161 FOR RECTANGULAR HOLLOW SECTION.

PROJECT SPECIFICATION

1. THE NET SAFE BEARING CAPACITY OF SOIL IS TAKEN AS 30T TONNE AT 1.8m DEPTH FROM THE SOLAR PIR CLIENT.

SIGNING AUTHORITY

PROJECT FACILITATOR | PROJECT LEADER

SITE ENGINEER | CONSULTANT

MR. SHUBHAM BAGHEL
A.Y. MISTURIA

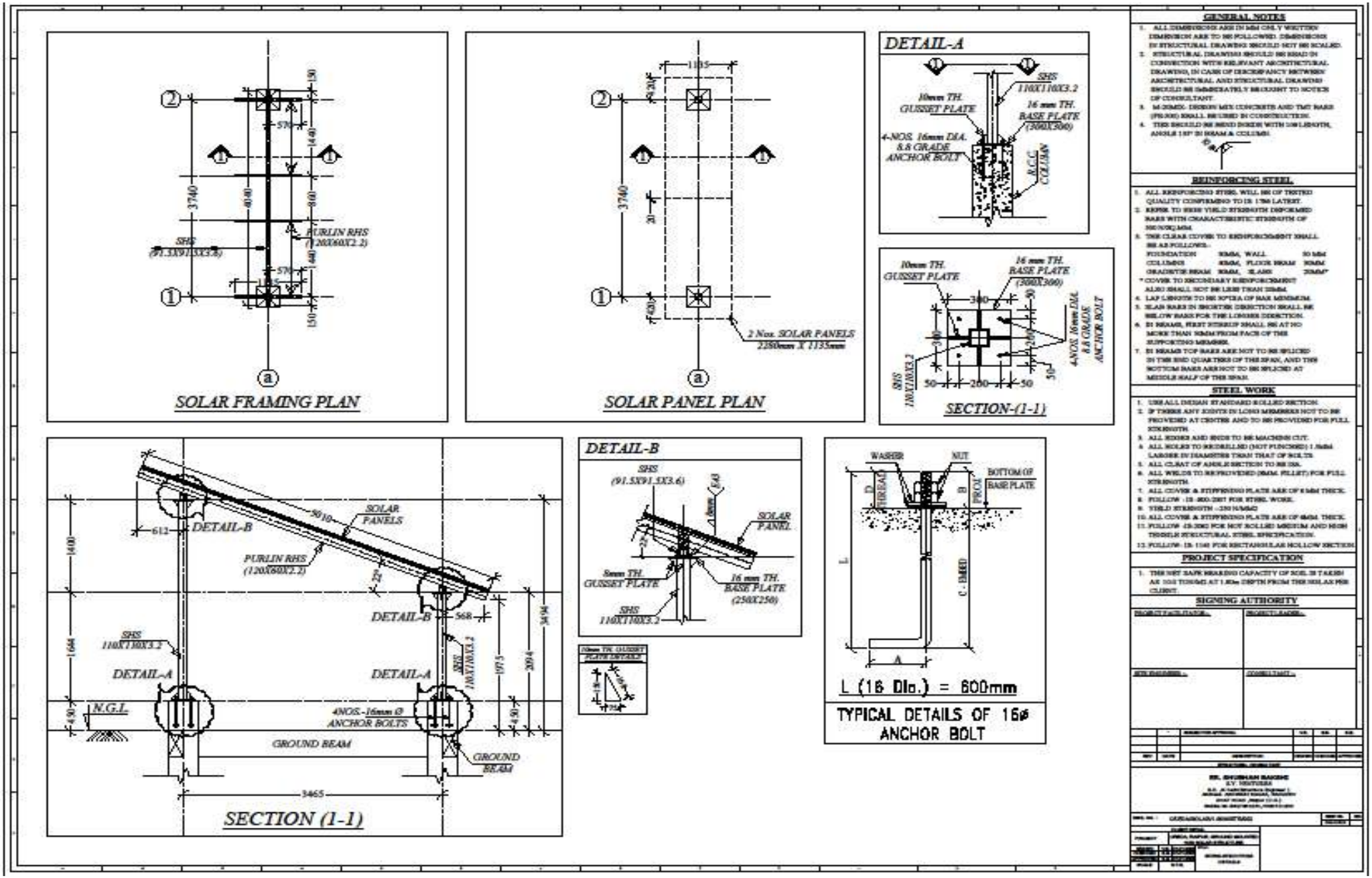
SOLAR FRAMING PLAN
SOLAR PANEL PLAN
2 Nos. SOLAR PANELS 2280mm X 1135mm
DETAIL-A
SHS 110X110X3.2
10mm TH. GUSSET PLATE
16 mm TH. BASE PLATE (300X300)
4-NOS. 16mm DIA. 8.8 GRADE ANCHOR BOLT
R.C.C COLUMN
SECTION-(1-1)
4NOS 16mm DIA. 8.8 GRADE ANCHOR BOLT
SECTION (1-1)
SOLAR PANELS
PURLIN RHS (120X60X2.2)
DETAIL-B
DETAIL-A
SHS 110X110X3.2
N.G.L.
4NOS.-16mm Ø ANCHOR BOLTS
GROUND BEAM
GROUND BEAM
DETAIL-B
SHS (91.5X91.5X3.6)
SOLAR PANEL
5mm TH. GUSSET PLATE
16 mm TH. BASE PLATE (250X250)
SHS 110X110X3.2
WASHER
NUT
BOTTOM OF BASE PLATE
THREAD
PROJ.
C - EMBED
L (16 Dia.) = 600mm
TYPICAL DETAILS OF 16ø ANCHOR BOLT
GENERAL NOTES
REINFORCING STEEL
STEEL WORK
PROJECT SPECIFICATION
SIGNING AUTHORITY

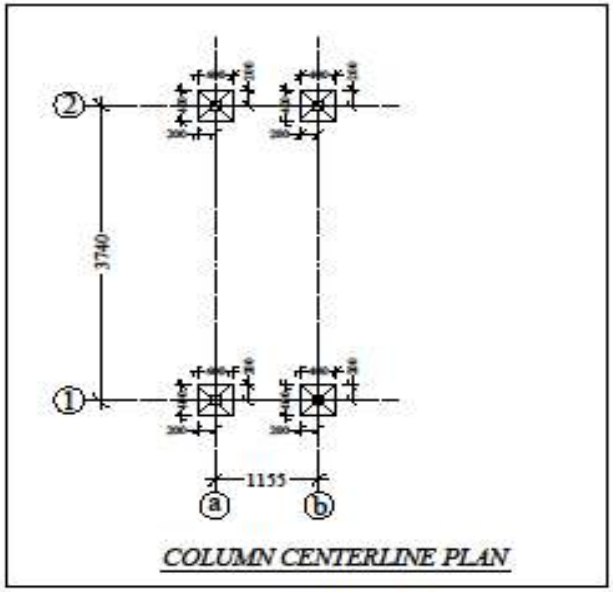

COLUMN CENTERLINE PLAN

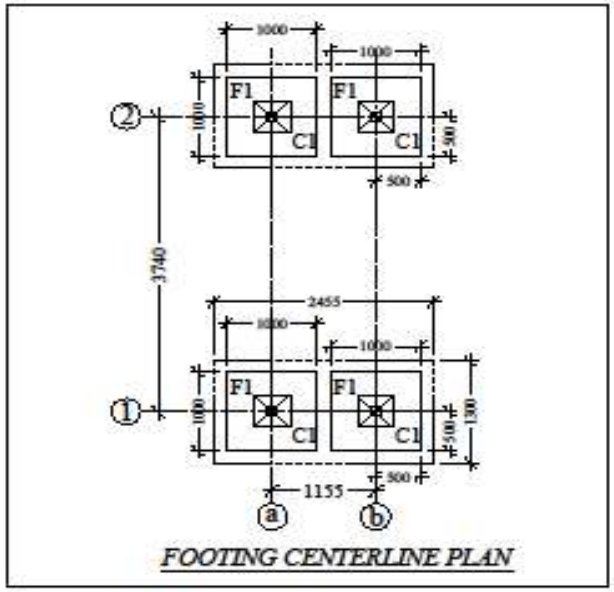

FOOTING CENTERLINE PLAN

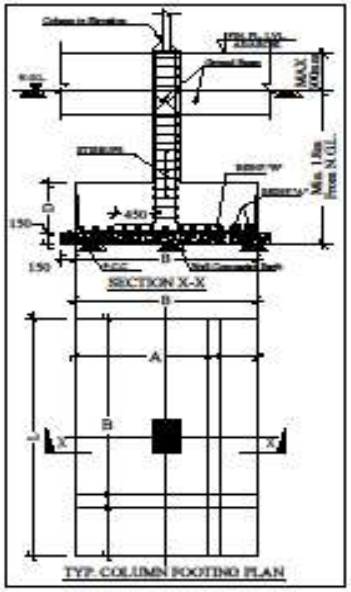

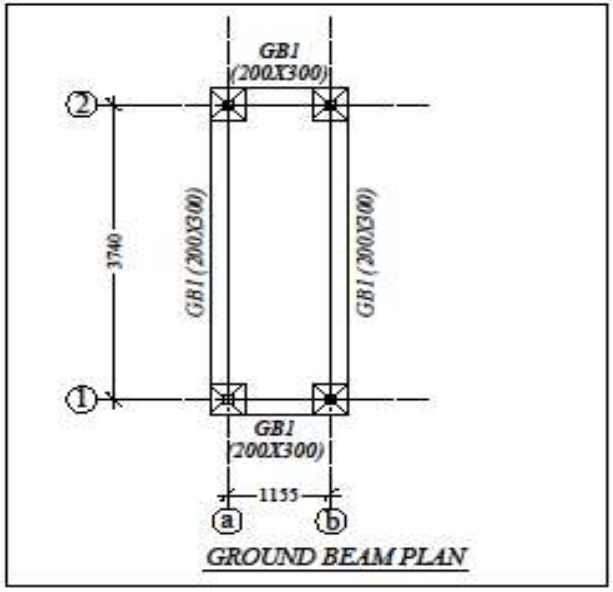

GROUND BEAM PLAN

COLUMN SCHEDULE (M20:Fe500)

UP-TO TOP	M20 : Fe500
	LINKS
	2L-8ϕ@175mm c/c
	400 X 400
	●T16 ◆T12
	4-T16+4-T12
SIZE	400 X 400
COLUMN MARKED	C1

GROUND BEAM DETAIL

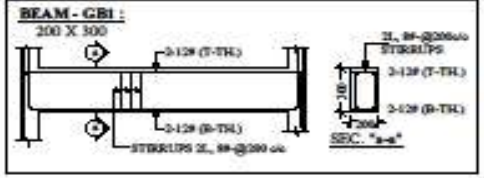

FOOTING SCHEDULE (M20:Fe500)

FOOTING NUMBERS	FOOTING TYPE	FOOTING SIZE		D	BOTTOM REINFORCEMENT		TOP REINFORCEMENT	
		L	B		MAIN	DIST.	MAIN	DIST.
F1	BOX	1000	1000	375	T10-@150c/c	T10-@150c/c	T10-@250c/c	T10-@250c/c

GENERAL NOTES

1. ALL DIMENSIONS ARE IN MM ONLY WRITTEN DIMENSION ARE TO BE FOLLOWED. DIMENSIONS IN STRUCTURAL DRAWING SHOULD NOT BE SCALED.
2. STRUCTURAL DRAWING SHOULD BE READ IN CONNECTION WITH RELEVANT ARCHITECTURAL DRAWING, IN CASE OF DISCREPANCY BETWEEN ARCHITECTURAL AND STRUCTURAL DRAWING SHOULD BE IMMEDIATELY BROUGHT TO NOTICE OF CONSULTANT.
3. M-20MPa DESIGN MIX CONCRETE AND TMT BARS (FE500) SHALL BE USED IN CONSTRUCTION.
4. TIES SHOULD BE BENT INSIDE WITH 135 LENGTH, ANGLE 135° IN BEAM & COLUMN.

REINFORCING STEEL

1. ALL REINFORCING STEEL WILL BE OF TESTED QUALITY CONFORMING TO IS 1786 LATEST.
2. REFER TO HIGH YIELD STRENGTH DEFORMED BARS WITH CHARACTERISTIC STRENGTH OF 500 N/M2 MM.
3. THE CLEAR COVER TO REINFORCEMENT SHALL BE AS FOLLOWS:-

FOUNDATION	50MM	WALL	30 MM
COLUMNS	40MM	FLOOR BEAM	30MM
GRADETIE BEAM	30MM	SLAB	20MM*

* COVER TO SECONDARY REINFORCEMENT ALSO SHALL NOT BE LESS THAN 20MM.
4. LAP LENGTH TO BE 50 DIA OF BAR MINIMUM.
5. SLAB BARS IN SHORTER DIRECTION SHALL BE BELOW BARS FOR THE LONGER DIRECTION.
6. IN BEAMS, FIRST STIRRUP SHALL BE AT NO MORE THAN 50MM FROM FACE OF THE SUPPORTING MEMBER.
7. IN BEAMS TOP BARS ARE NOT TO BE SPLICED IN THE END QUARTERS OF THE SPAN, AND THE BOTTOM BARS ARE NOT TO BE SPLICED AT MIDDLE HALF OF THE SPAN.

STEEL WORK

1. USE ALL INDIAN STANDARD ROLLED SECTION.
2. IF THERE ANY JOINTS IN LONG MEMBERS NOT TO BE PROVIDED AT CENTRE AND TO BE PROVIDED FOR FULL STRENGTH.
3. ALL EDGES AND ENDS TO BE MACHINE CUT.
4. ALL HOLES TO BE DRILLED (NOT PUNCHED) 1.5MM LARGER IN DIAMETER THAN THAT OF BOLTS.
5. ALL CLEAT OF ANGLE SECTION TO BE DIA.
6. ALL WELDS TO BE PROVIDED (6MM FILLET) FOR FULL STRENGTH.
7. ALL COVER & STIFFENING PLATE ARE OF 6MM THICK.
8. FOLLOW : IS 800:2007 FOR STEEL WORK.
9. YIELD STRENGTH – 250 N/MM2
10. ALL COVER & STIFFENING PLATE ARE OF 6MM. THICK.
11. FOLLOW: IS:2062 FOR HOT ROLLED MEDIUM AND HIGH TENSILE STRUCTURAL STEEL SPECIFICATION.
12. FOLLOW: IS: 1161 FOR RECTANGULAR HOLLOW SECTION.

PROJECT SPECIFICATION

1. THE NET SAFE BEARING CAPACITY OF SOIL IS TAKEN AS 10.0 TON/M2 AT 1.0m DEPTH FROM THE MEAN PER CLIENT.

SIGNING AUTHORITY

PROJECT FACILITATOR:- | PROJECT LEADER:-

SITE ENGINEER:- | CONSULTANT:-

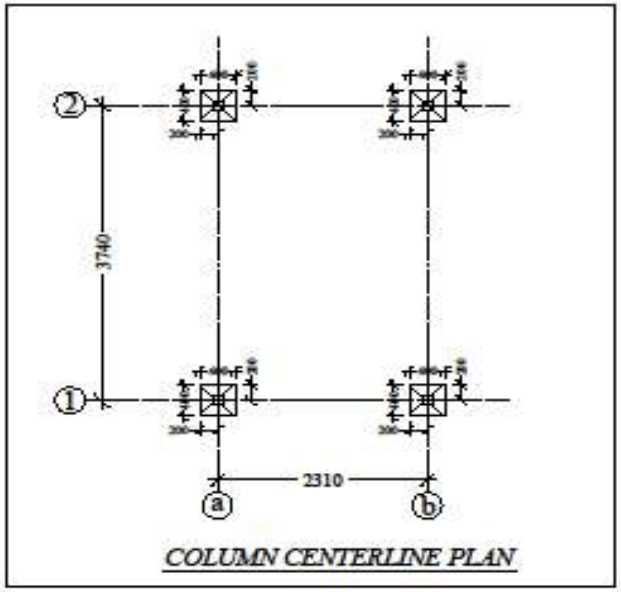

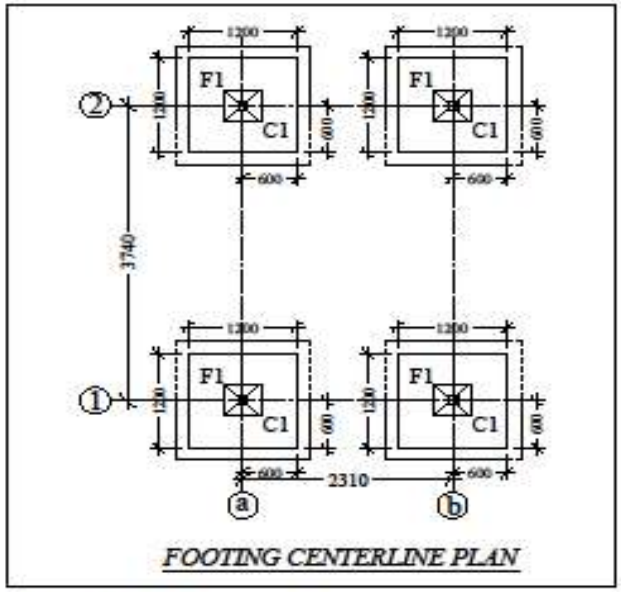

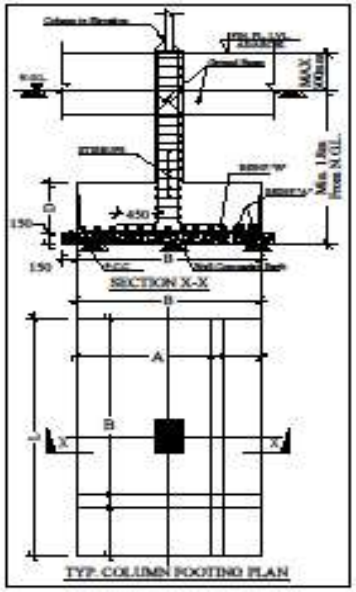

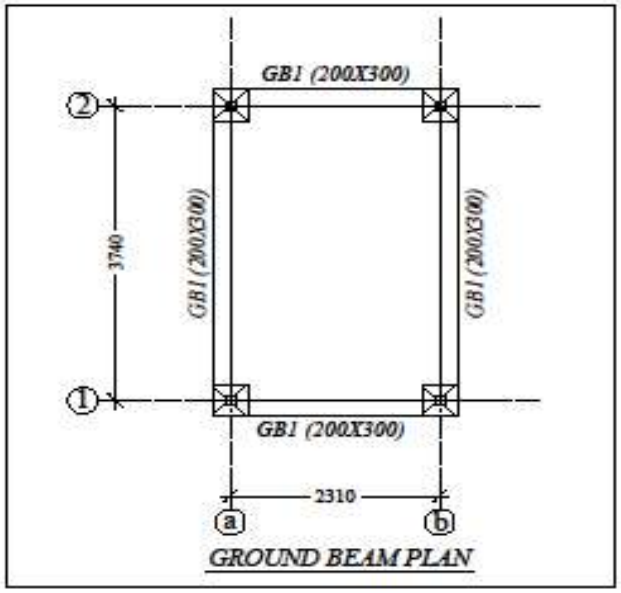

COLUMN SCHEDULE (M20:Fe500)

UP-TO TOP	M20 : Fe500
	LINKS
	2L-8#-@175mm c/c
	400 X 400
	•T16 •T12
	4-T16+4-T12
SIZE	400 X 400
COLUMN MARKED	C1

GROUND BEAM DETAIL

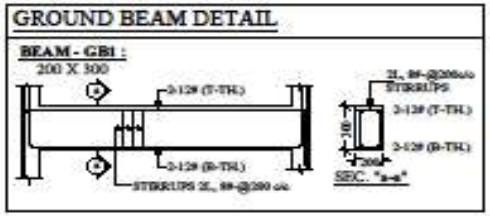

FOOTING SCHEDULE (M20:Fe500)

FOOTING NUMBERS	FOOTING TYPE	FOOTING SIZE		D	BOTTOM REINFORCEMENT		TOP REINFORCEMENT	
		L	B		MAIN	DIST.	MAIN	DIST.
F1	BOX	1200	1200	375	T10-@200c/c	T10-@200c/c	T10-@250c/c	T10-@250c/c

GENERAL NOTES

1. ALL DIMENSIONS ARE IN MM ONLY WRITTEN DIMENSION ARE TO BE FOLLOWED. DIMENSIONS IN STRUCTURAL DRAWING SHOULD NOT BE SCALED.
2. STRUCTURAL DRAWING SHOULD BE READ IN CONNECTION WITH RELEVANT ARCHITECTURAL DRAWING, IN CASE OF DISCREPANCY BETWEEN ARCHITECTURAL AND STRUCTURAL DRAWING SHOULD BE IMMEDIATELY BROUGHT TO NOTICE OF CONSULTANT.
3. M-20(MIX- DESIGN MIX CONCRETE AND TMT BARS (FE500) SHALL BE USED IN CONSTRUCTION.
4. TIES SHOULD BE BEND INDEED WITH 10D LENGTH, ANGLE 135° IN BEAM & COLUMN.

REINFORCING STEEL

1. ALL REINFORCING STEEL WILL BE OF TESTED QUALITY CONFORMING TO IS: 1786 LATEST.
2. REFER TO HIGH YIELD STRENGTH DEFORMED BARS WITH CHARACTERISTIC STRENGTH OF 500N/SQ.MM.
3. THE CLEAR COVER TO REINFORCEMENT SHALL BE AS FOLLOWS:-

FOUNDATION	50MM,	WALL	30 MM
COLUMNS	40MM,	FLOOR BEAM	30MM
GRADETIE BEAM	30MM,	SLABS	20MM*

* COVER TO SECONDARY REINFORCEMENT ALSO SHALL NOT BE LESS THAN 20MM.

4. LAP LENGTH TO BE 50 DIA OF BAR MINIMUM.
5. SLAB BARS IN SHORTER DIRECTION SHALL BE BELOW BARS FOR THE LONGER DIRECTION.
6. IN BEAMS, FIRST STIRRUP SHALL BE AT NO MORE THAN 50MM FROM FACE OF THE SUPPORTING MEMBER.
7. IN BEAMS TOP BARS ARE NOT TO BE SPLICED IN THE END QUARTERS OF THE SPAN, AND THE BOTTOM BARS ARE NOT TO BE SPLICED AT MIDDLE HALF OF THE SPAN.

STEEL WORK

1. USE ALL INDIAN STANDARD ROLLED SECTION.
2. IF THERE ANY JOINTS IN LONG MEMBERS NOT TO BE PROVIDED AT CENTRE AND TO BE PROVIDED FOR FULL STRENGTH.
3. ALL EDGES AND ENDS TO BE MACHINE CUT.
4. ALL HOLES TO BE DRILLED (NOT PUNCHED) 1.5MM LARGER IN DIAMETER THAN THAT OF BOLTS.
5. ALL CLEAT OF ANGLE SECTION TO BE DIA.
6. ALL WELDS TO BE PROVIDED (5MM. FILLET) FOR FULL STRENGTH.
7. ALL COVER & STIFFENING PLATE ARE OF 8MM THICK.
8. FOLLOW : IS :800-2007 FOR STEEL WORK.
9. YIELD STRENGTH :-250 N/MM2
10. ALL COVER & STIFFENING PLATE ARE OF 8MM. THICK.
11. FOLLOW :IS:2062 FOR HOT ROLLED MEDIUM AND HIGH TENSILE STRUCTURAL STEEL SPECIFICATION.
12. FOLLOW: IS: 1161 FOR RECTANGULAR HOLLOW SECTION.

PROJECT SPECIFICATION

1. THE NET SAFE BEARING CAPACITY OF SOIL IS TAKEN AS 30T TONNE AT 1.8m DEPTH FROM THE SOLAX PER CLIENT.

SIGNING AUTHORITY

PROJECT FACILITATOR.. | PROJECT OWNER..

SITE ENGINEER.. | CONSULTANT..

MR. SHUBHAM BAGHEL
A.T. SHUTURA

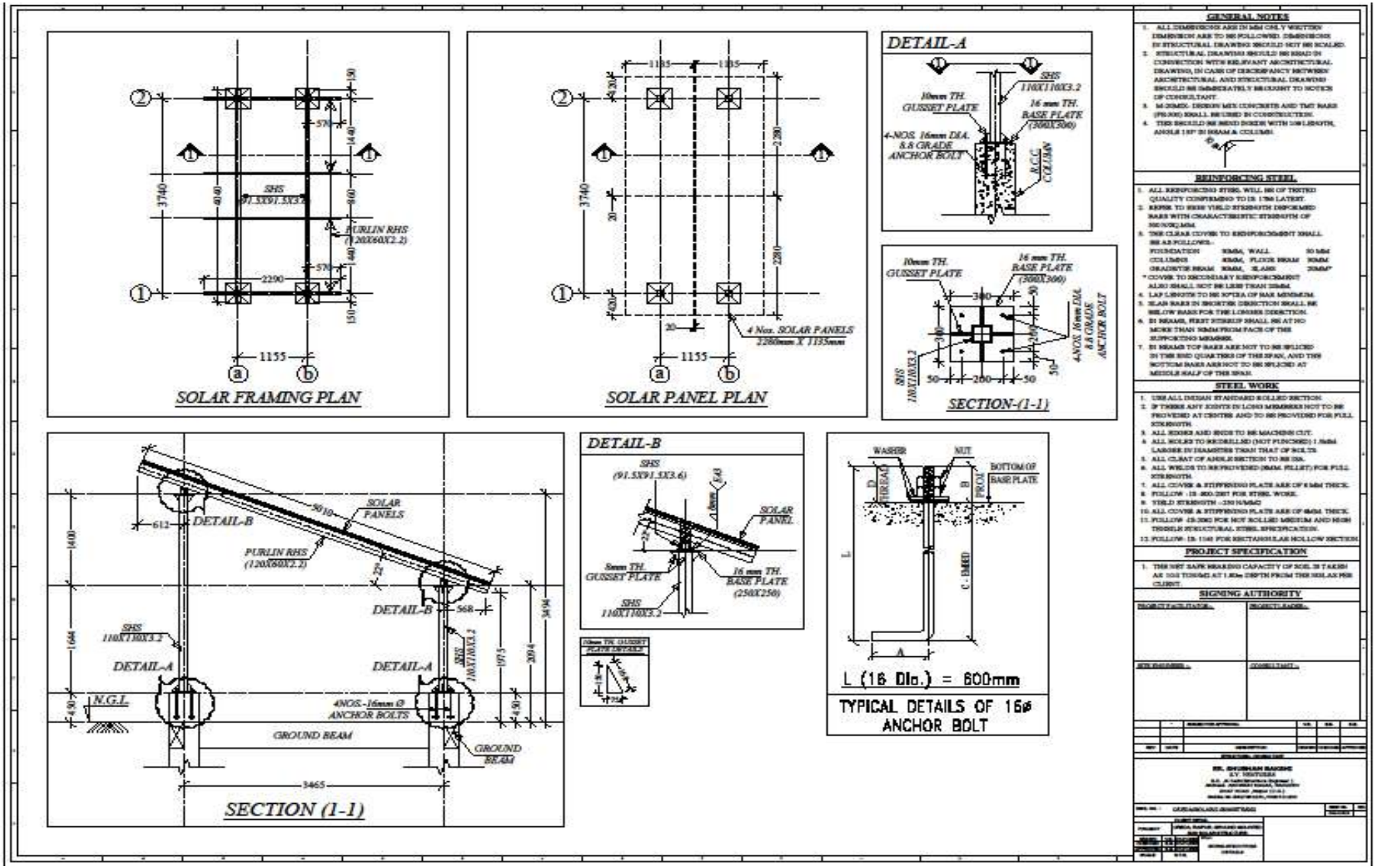
SOLAR FRAMING PLAN
SHS (91.5X91.5X3.2)
PURLIN RHS (120X60X2.2)
SOLAR PANEL PLAN
4 Nos. SOLAR PANELS 2280mm X 1135mm
DETAIL-A
SHS 110X110X3.2
10mm TH. GUSSET PLATE
16 mm TH. BASE PLATE (300X300)
4-NOS. 16mm DIA. 8.8 GRADE ANCHOR BOLT
R.C.C COLUMN
SECTION-(1-1)
4NOS. 16mm DIA. 8.8 GRADE ANCHOR BOLT
SOLAR PANELS
DETAIL-B
DETAIL-A
N.G.L
4NOS.-16mm Ø ANCHOR BOLTS
GROUND BEAM
SECTION (1-1)
DETAIL-B
SHS (91.5X91.5X3.6)
SOLAR PANEL
5mm TH. GUSSET PLATE
16 mm TH. BASE PLATE (250X250)
SHS 110X110X3.2
WASHER
NUT
BOTTOM OF BASE PLATE
THREAD
FROM
C - BMED
L (16 Dia.) = 600mm
TYPICAL DETAILS OF 16ø ANCHOR BOLT
GENERAL NOTES
REINFORCING STEEL
STEEL WORK
PROJECT SPECIFICATION
SIGNING AUTHORITY

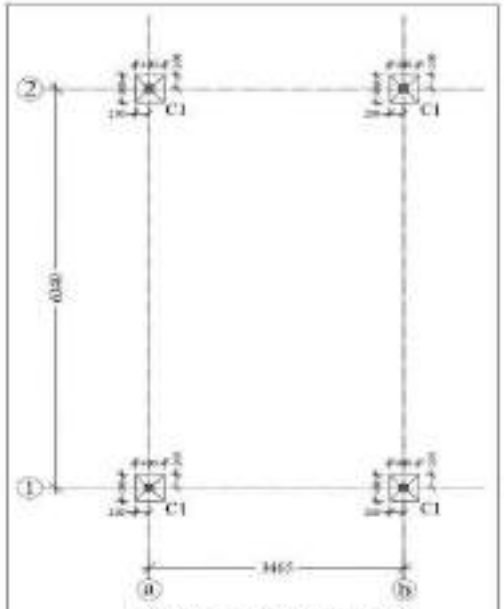

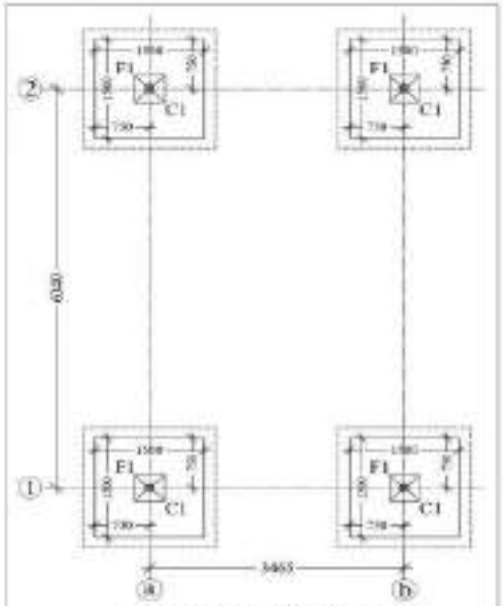

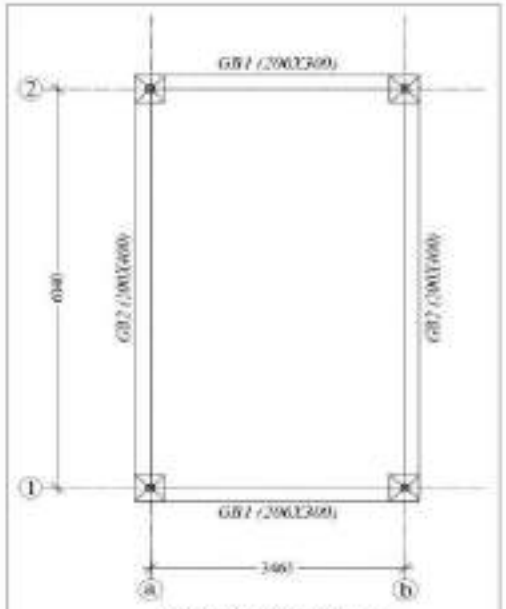

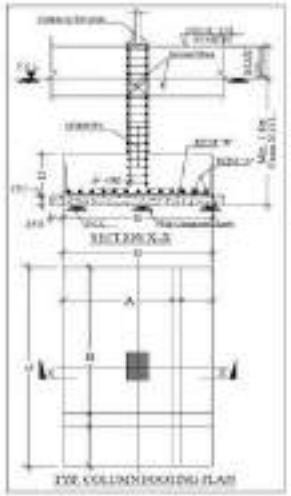

COLUMN SCHEDULE (M20:Fe500)

UP-TO TOP	M20 : Fe500
	TIES
	400
	4-T16 + 4-T12
SIZE	400 X 400
COLUMN MARKED	C1

GROUND BEAM DETAIL

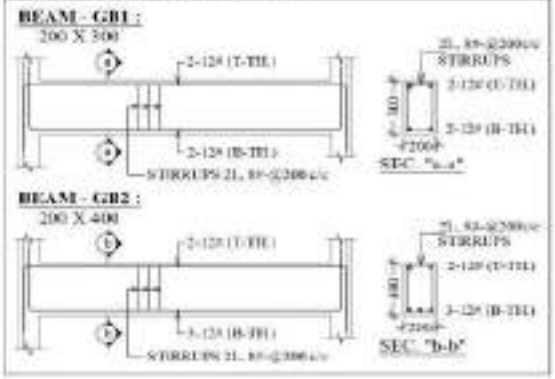

FOOTING SCHEDULE (M20:Fe500)

FOOTING NUMBERS	FOOTING TYPE	FOOTING SIZE		D	BOTTOM REINFORCEMENT		TOP REINFORCEMENT	
		L	B		MAIN	DIST.	MAIN	DIST.
F1	BOX	1500	1500	375	T16-@200c/c	T10-@200c/c	T10-@250c/c	T10-@250c/c

GENERAL NOTES

1. ALL DIMENSIONS ARE IN MM ONLY WRITTEN DIMENSION ARE TO BE FOLLOWED. DIMENSIONS IN STRUCTURAL DRAWING SHOULD NOT BE SCALED.
2. STRUCTURAL DRAWING SHOULD BE READ IN CONNECTION WITH RELEVANT ARCHITECTURAL DRAWING, IN CASE OF DISCREPANCY BETWEEN ARCHITECTURAL AND STRUCTURAL DRAWING SHOULD BE IMMEDIATELY BROUGHT TO NOTICE OF CONSULTANT.
3. ALL NOTES, DESIGN MUST BE CHECKED AND THAT BARS OF THE GRADE BE USED IN CONSTRUCTION.
4. TIES SHOULD BE BENT DOWN WITH 135° HOOKS, ANGLE 135° IN DRAWING COLUMN.

REINFORCING STEEL

1. ALL REINFORCING STEEL WILL BE OF TMT QUALITY OTHERWISE TO BE STRICTLY AS PER IS 1786:2008.
2. REFER TO BOND YIELD STRENGTH REFORMED BARS WITH CHARACTERISTIC STRENGTH OF 500 N/mm².
3. THE CLEAR COVER TO REINFORCEMENT SHALL BE AS FOLLOWS:

FOUNDATION*		SIDE WALL	30 MM
COLUMNS	40MM	FOOTING BEAM	30MM
GRADE TIE BEAM	30MM	SLABS	20MM

* (NOTE: TO SEVERE ATMOSPHERE RELATIONSHIPS ALSO SHALL NOT BE LESS THAN 25MM)
4. LAP LENGTH TO BE 50 DIA OF BAR MINIMUM.
5. SLAB BARS OF SHORTER SPAN FROM SHALL BE BELOW BARS FOR THE LONGER DIRECTION.
6. IN BEAMS, THAT STIRRUP SHALL BE AT 150 FROM THAN FROM FACE OF THE SUPPORTING MEMBERS.
7. IN BEAMS TOP BARS ARE NOT TO BE SPLICED IN THE MID-SPAN OF THE SPAN, AND THE BOTTOM BARS ARE NOT TO BE SPLICED AT SUPPORTS HALF OF THE SPAN.

STEEL WORK

1. USE ALL INTERNAL AND BOLTED CONNECTIONS.
2. IF THERE ANY NEEDS OF JOINT MEMBERS NOT TO BE PROVIDED AT CENTER AND TO BE PROVIDED FOR FULL STRENGTH.
3. ALL EDGES AND ENDS TO BE MACHINE CUT.
4. ALL HOLES TO BE DRILLED (NOT PUNCHED) 1.5MM LARGER TO DIAMETER THAN THICKNESS OF SHEETS.
5. ALL FILLET OF SINGLE SECTION TO BE 5MM.
6. ALL WELDS TO BE PROVIDED 5MM FILLETS FOR FULL STRENGTH.
7. ALL COVER & STIFFENING PLATE ARE 6.0 MM THICK.
8. FOLLOW IS 800:2007 FOR STEEL WORK.
9. YIELD STRENGTH 250 N/mm².
10. ALL COVER & STIFFENING PLATE ARE 6.0 MM THICK.
11. FOLLOW IS-226 FOR HOT ROLLED MEDIUM AND HIGH TENSILE STRUCTURAL STEEL SPECIFICATION.
12. FOLLOW IS 1161 FOR RECTANGULAR HOLLOW SECTION.

PROJECT SPECIFICATION

1. THE SBC (SAFE BEARING CAPACITY OF SOIL IS TAKEN AS 150 KN/SQ.MT 1.5m DEPTH FROM THE PLAIN FOR FOUND.

SIGNING AUTHORITY

PREPARED BY:	CHECKED BY:
SR. ENGINEER	DESIGNATION

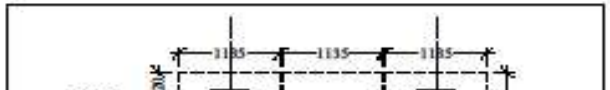

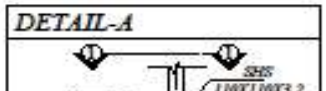

GENERAL NOTES

1. ALL DIMENSIONS ARE IN MM ONLY WRITTEN DIMENSION ARE TO BE FOLLOWED. DIMENSIONS IN STRUCTURAL DRAWING SHOULD NOT BE SCALED.
2. STRUCTURAL DRAWING SHOULD BE READ IN CONNECTION WITH RELEVANT ARCHITECTURAL DRAWING, IN CASE OF DISCREPANCY BETWEEN ARCHITECTURAL AND STRUCTURAL DRAWING

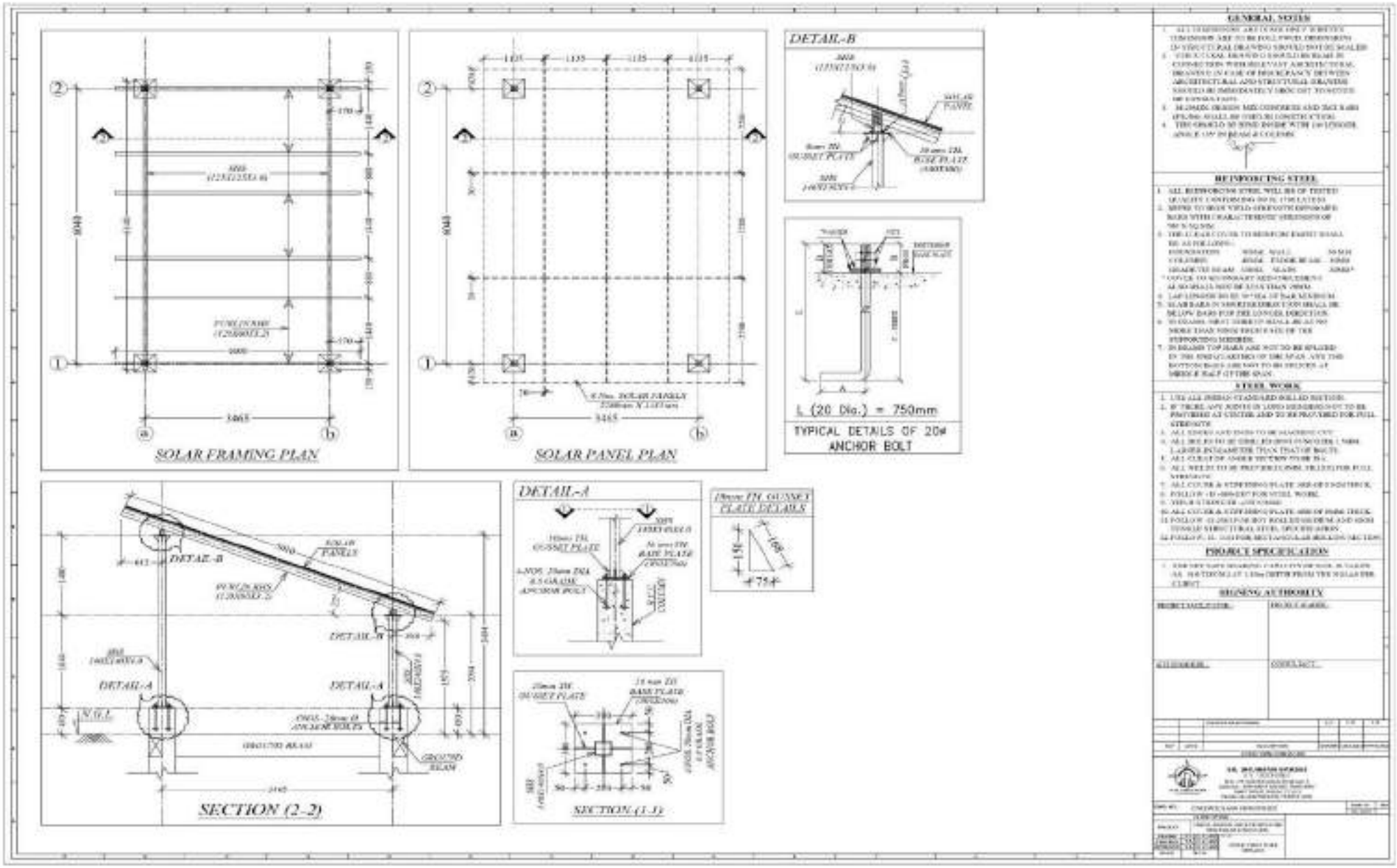
SOLAR FRAMING PLAN
SOLAR PANEL PLAN
DETAIL-B
L (20 Dia.) = 750mm
TYPICAL DETAILS OF 20ø ANCHOR BOLT
SOLAR PANELS
DETAIL-A
SECTION (2-2)
SECTION (1-1)
GENERAL NOTES
REINFORCING STEEL
STEEL WORK
PROJECT SPECIFICATION
SIGNING AUTHORITY

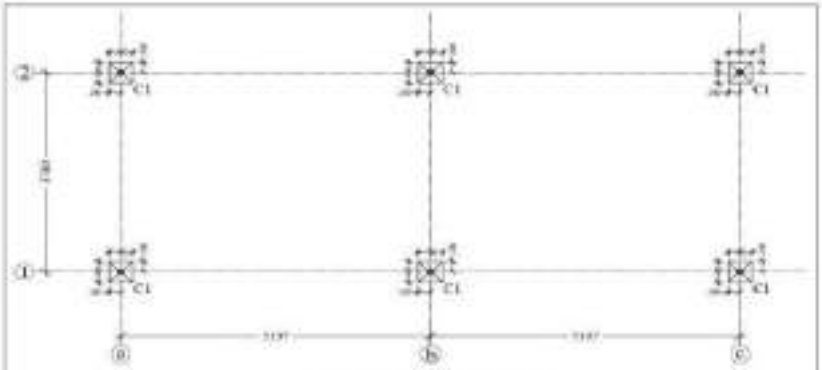

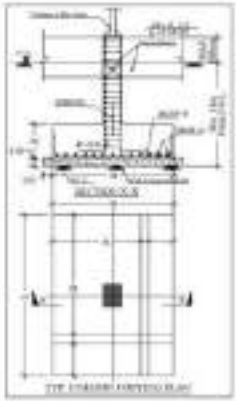

COLUMN SCHEDULE
(M20 Fe500)

UP-TO TOP	MIX : 1:1:2:4	
	1 PACK	
	300 X 300	
	4-T16+4-T12	
SIZE	400 X 400	
COLUMN MARKING	C1	

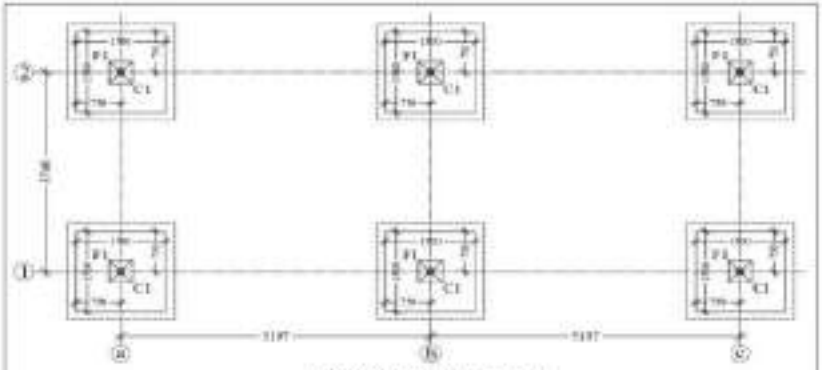

GROUND BEAM DETAIL

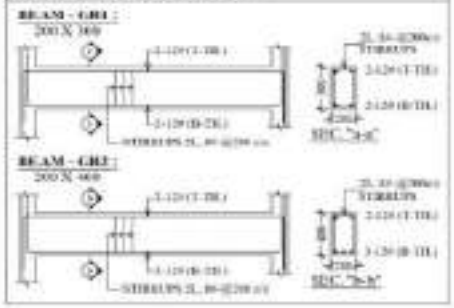

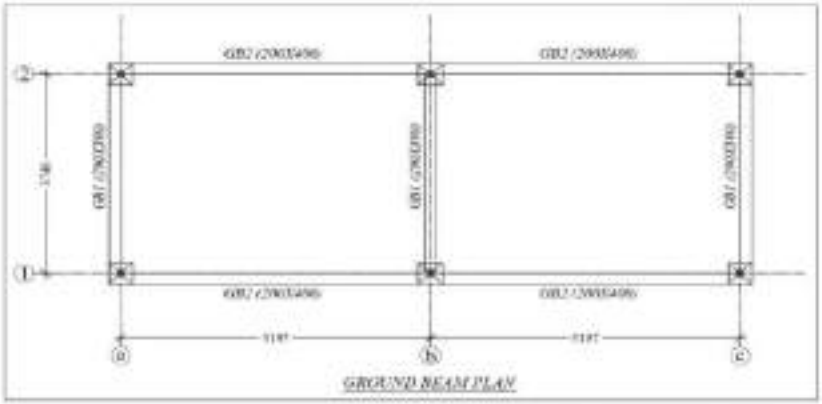

FOOTING SCHEDULE (M20 Fe500)

FOOTING NUMBERS	FOOTING TYPE	FOOTING SIZE		D	BOTTOM REINFORCEMENT		TOP REINFORCEMENT	
		L	B		MAIN	DIST	MAIN	DIST
F1	BOX	1300	1500	450	T16@200c/c	T10@200c/c	T16@250c/c	T10@200c/c

GENERAL NOTES

REINFORCING STEEL

STEEL WORK

PROJECT SPECIFICATION

SIGNING AUTHORITY

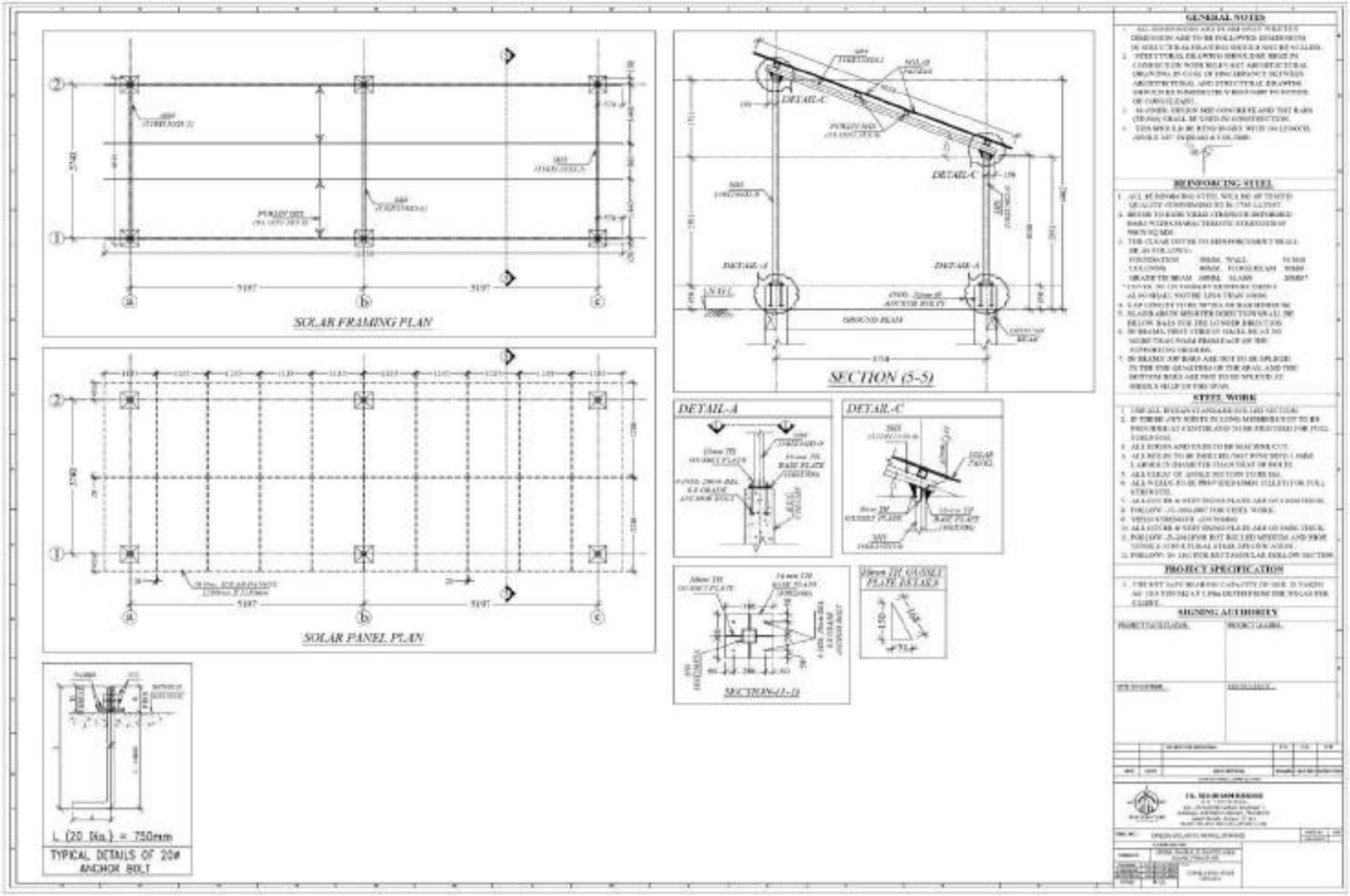
SOLAR FRAMING PLAN
SOLAR PANEL PLAN
SECTION (5-5)
DETAIL-A
DETAIL-C
SECTION-(1-1)
L (20 Dia.) = 750mm
TYPICAL DETAILS OF 20ø ANCHOR BOLT
GENERAL NOTES
REINFORCING STEEL
STEEL WORK
PROJECT SPECIFICATION
SIGNING AUTHORITY

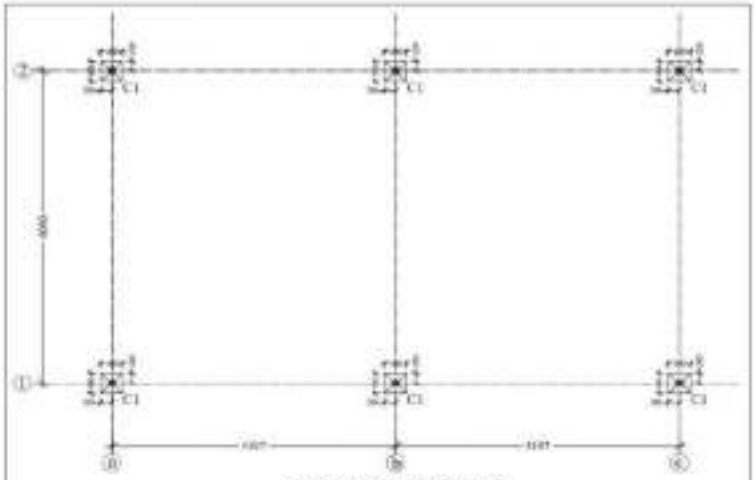

COLUMN CENTERLINE PLAN

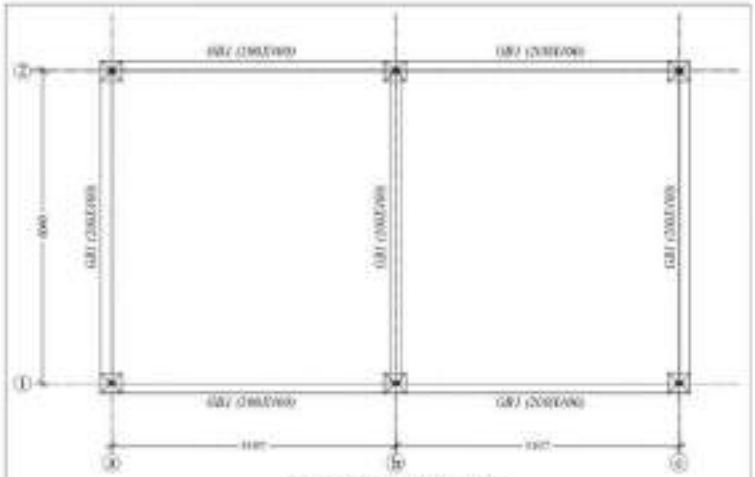

COLUMN CENTERLINE PLAN

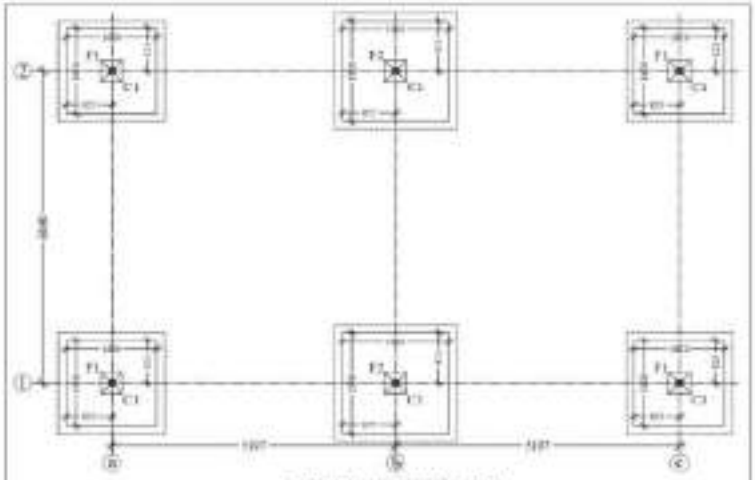

COLUMN CENTERLINE PLAN

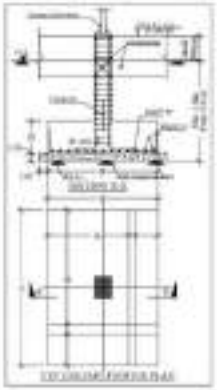

COLUMN SCHEDULE (M20:Fe500)

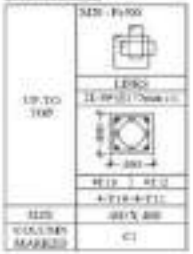

GROUND BEAM DETAIL

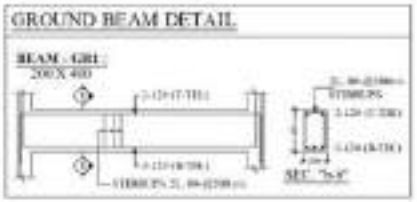

FOOTING SCHEDULE (M20:Fe500)

FOOTING NUMBERS	FOOTING TYPE	FOOTING SIZE		D	BOTTOM REINFORCEMENT		TOP REINFORCEMENT	
		L	B		MAIN	DIST.	MAIN	DIST.
F1	ISOL	1550	1450	450	T10@200c/c	T10@200c/c	T10@270c/c	T10@270c/c
F2	ISOL	1950	1950	450	T10@170c/c	T10@170c/c	T10@190c/c	T10@190c/c

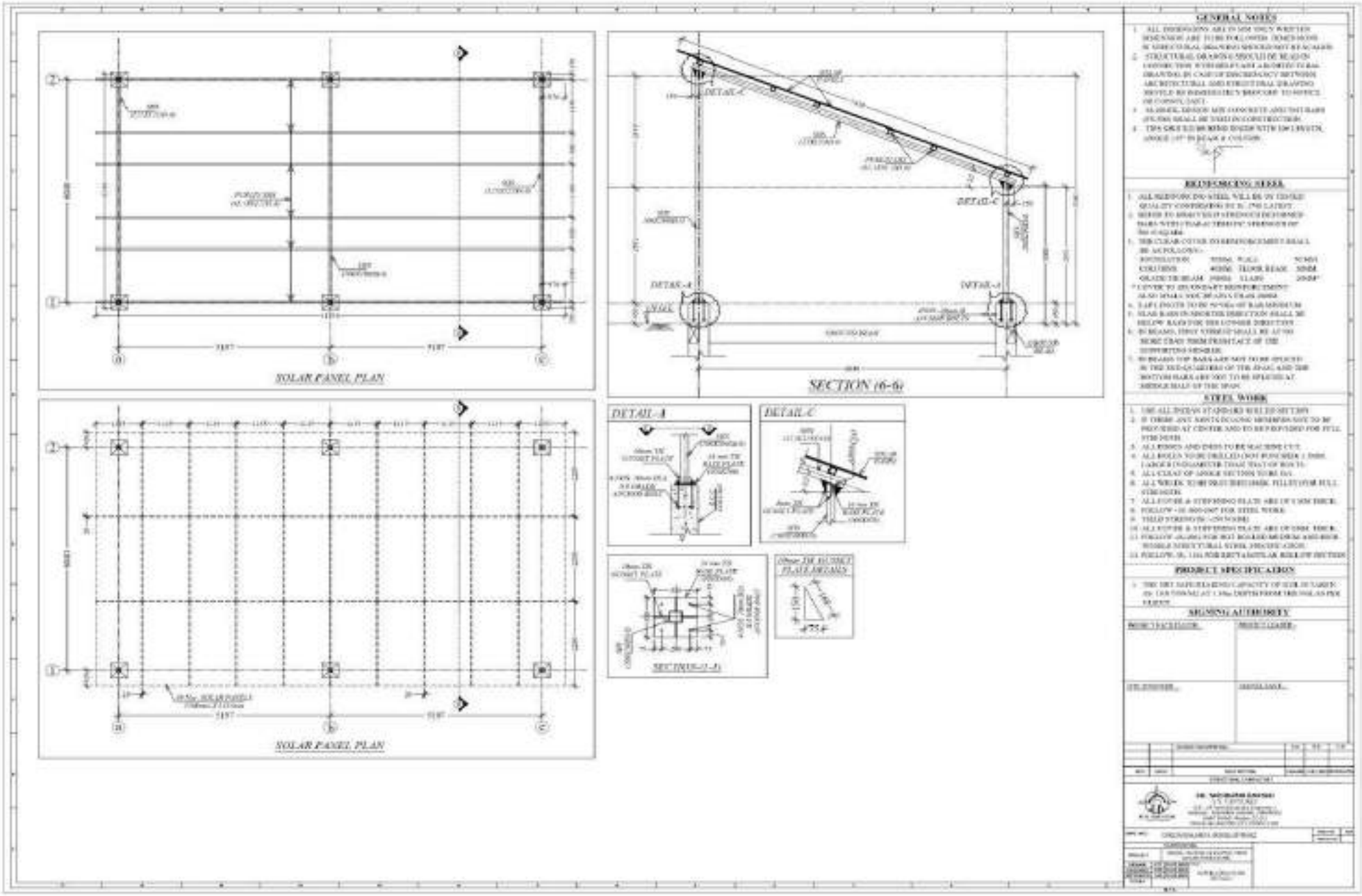
SOLAR PANEL PLAN
SECTION (6-6)
DETAIL-A
DETAIL-C
SOLAR PANEL PLAN
GENERAL NOTES
REINFORCING STEEL
STEEL WORK
PROJECT SPECIFICATION
SIGNING AUTHORITY

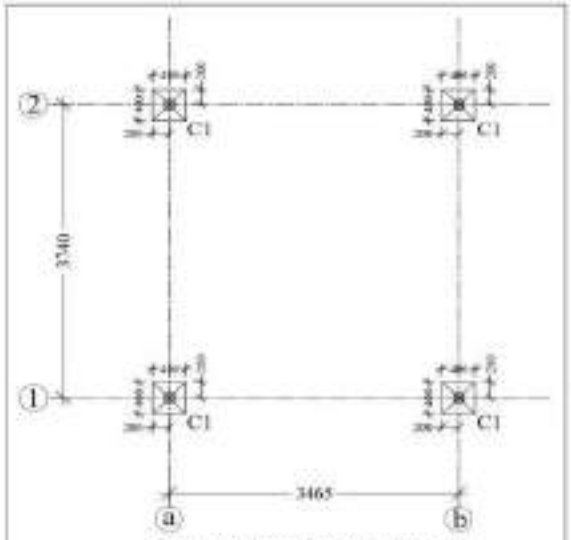

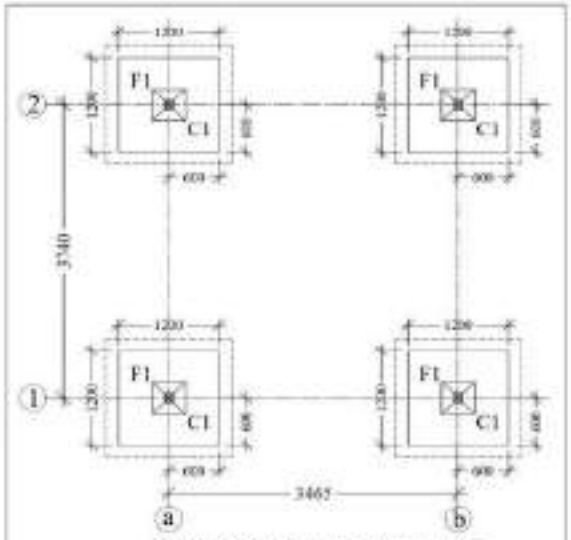

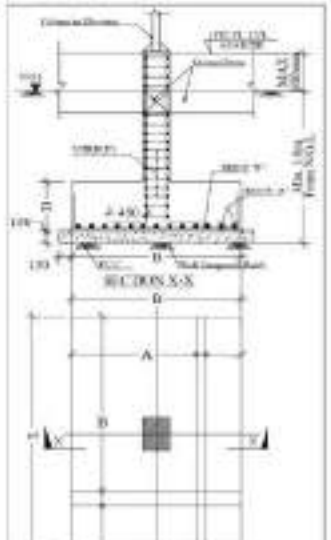

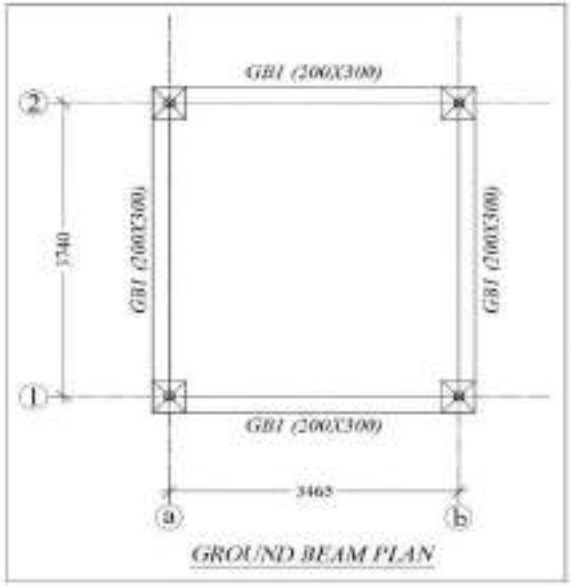

COLUMN SCHEDULE (M20:Fe500)

UP-TO TOP	M20 : Fe500
	LINKS
	2L-8t-@175mm c/c
	400 × 400
	8T16 / 8T12
	4-T16+4-T12
SIZE	400 X 400
COLUMN MARKED	C1

GROUND BEAM DETAIL

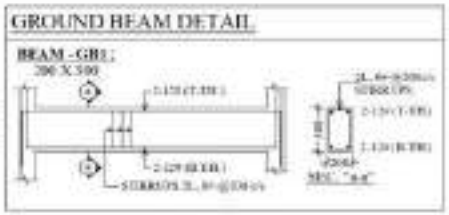

FOOTING SCHEDULE (M20:Fe500)

FOOTING NUMBERS	FOOTING TYPE	FOOTING SIZE		D	BOTTOM REINFORCEMENT		TOP REINFORCEMENT	
		L	B		MAIN	DIST.	MAIN	DIST.
F1	BOX	1200	1200	575	T10-@200c/c	T10-@200c/c	T10-@250c/c	T10-@250c/c

GENERAL NOTES

REINFORCING STEEL

STEEL WORK

PROJECT SPECIFICATION

SIGNING AUTHORITY

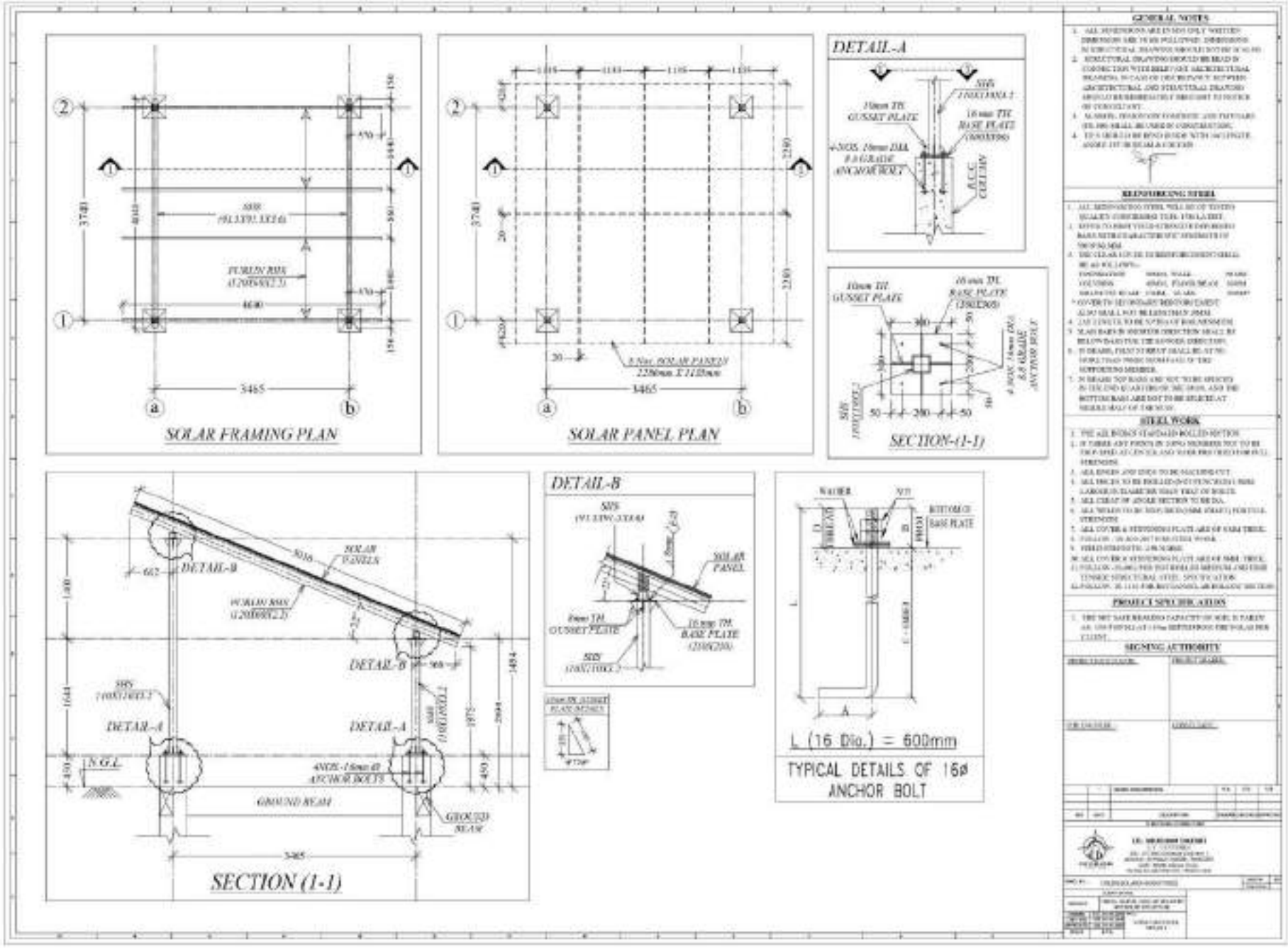
SOLAR FRAMING PLAN
SOLAR PANEL PLAN
DETAIL-A
SECTION-(1-1)
DETAIL-B
SECTION (1-1)
L (16 Dia.) = 600mm
TYPICAL DETAILS OF 16ø ANCHOR BOLT
GENERAL NOTES
REINFORCING STEEL
STEEL WORK
PROJECT SPECIFICATIONS
SIGNING AUTHORITY

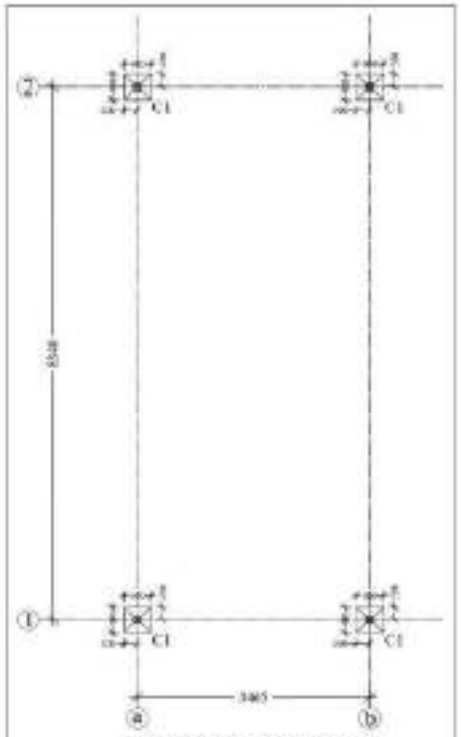

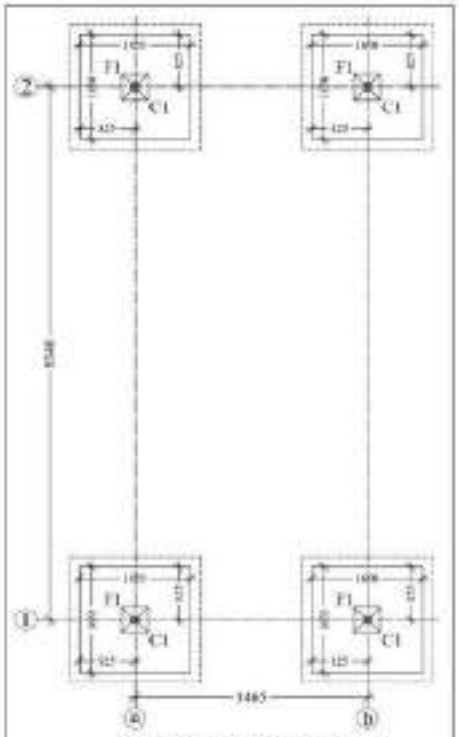

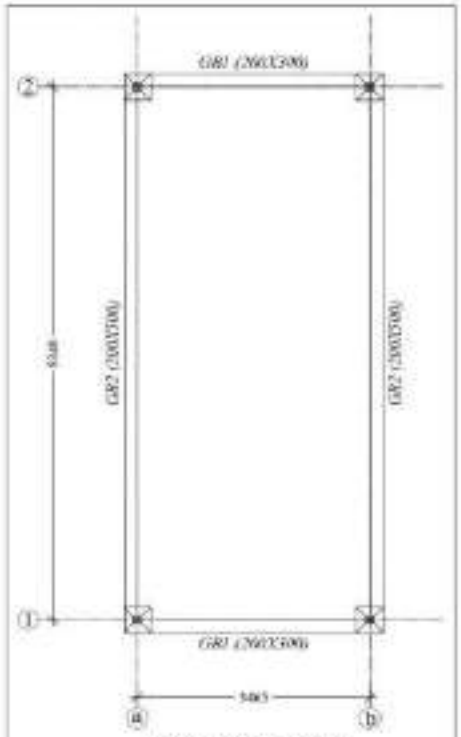

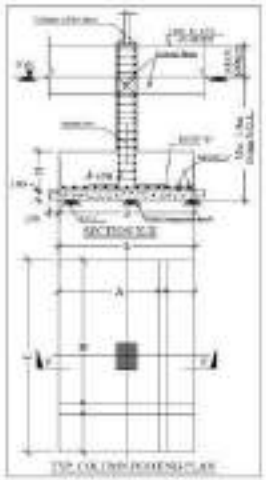

COLUMN SCHEDULE (M20:Fe500)

UP TO TOP	M20 : Fe500
	TIES: 2L-8ϕ@170mm c/c
	400
	400
	4-T16 / 4-T12
SIZE	400 X 400
COLUMN MARKED	C1

GROUND BEAM DETAIL

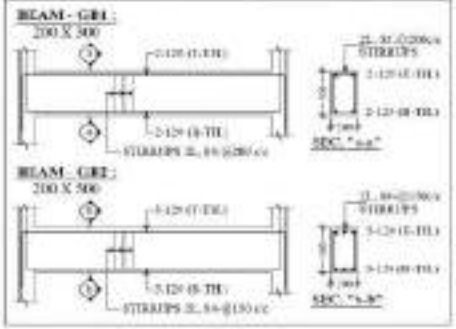

FOOTING SCHEDULE (M20:Fe500)

FOOTING NUMBERS	FOOTING TYPE	FOOTING SIZE		D	BOTTOM REINFORCEMENT		TOP REINFORCEMENT	
		L	B		MAIN	DIST.	MAIN	DIST.
F1	ISOL	1600	1600	375	T10-@200c/c	T10-@200c/c	T10-@250c/c	T10-@200c/c

GENERAL NOTES

1. ALL DIMENSIONS ARE IN MM UNLY WRITTEN DIMENSION ARE TO BE FOLLOWED. DIMENSION IN STRUCTURAL DRAWING DO NOT BEING SCALED.
2. STRUCTURAL DRAWING SHOULD BE READ IN CONJUNCTION WITH RELEVANT ARCHITECTURAL DRAWING. IN CASE OF DISCREPANCY BETWEEN ARCHITECTURAL AND STRUCTURAL DRAWING SOURCE OF MISMATCH MUST BE BROUGHT TO NOTICE OF CONSULTANT.
3. BUNDEL OF BARS ARE CONCRETE AND DEFORMED BARS SHALL BE USED IN CONSTRUCTION.
4. TIES SHOULD BE BENT INSIDE WITH 135° HOOK.

REINFORCING STEEL

1. ALL REINFORCING STEEL WILL BEON TMTFE QUALITY CONFORMING TO IS : 1786-2008.
2. NOTE: IN HIGH YIELD STRENGTH DEFORMED BARS WITH TRADEMARK "ZENITH" THE DATE OF PRODUCTION.
3. THE CLEAR COVER TO REINFORCEMENT SHALL BE AS FOLLOWS:-
   FOUNDATION — 50MM. WALL — 30MM
   COLUMNS — 40MM. FLOOR BEAM — 30MM
   BEAM SIDE BEAM — 30MM. SLABS — 20MM*
   * COVER TO ANY SECONDARY REINFORCEMENT ALSO SHALL NOT BE LESS THAN 20MM.
4. LAP LENGTH TO BE AS PER AS 456 MINIMUM.
5. SLAB BARS IN SHORTER DIRECTION SHALL BE BELOW BARS FOR THE LONGER DIRECTION.
6. TOP AND BOTTOM STIRRUP SHALL BE ATTACHED MORE THAN 300MM FROM FACE OF THE CONCRETE MEMBER.
7. TOP AND TOP BARS ARE NOT TO BE SPLICED IN THE MID QUARTER OF THE SPAN AND THE BOTTOM BARS ARE NOT TO BE SPLICED AT NEARER HALF OF THE SPAN.

STEEL WORK

1. USE ALL INDIAN STANDARD ROLLED SECTION.
2. IF THERE ANY JOINTS IN LOAD MEMBERS NOT TO BE PROVIDED AT PENTER AND TO BE PROVIDED FOR FULL STRENGTH.
3. ALL HOLES AND SMS TO BE MACHINE CUT.
4. ALL HOLES TO BE DRILLED (NOT PUNCHED) 1.5MM. LARGER IN DIAMETER THAN THAT OF BOLTS.
5. ALL FLAT OF ANGLE SECTION TO BE DA.
6. ALL WELDS TO BE FRONT FIRST (MIN. FILLET) FOR FULL STRENGTH.
7. ALL COVER & STIFFENING PLATE ARE OF 6MM THICK.
8. FOR GAS - N 265.007 FOR STEEL WORK.
9. YIELD STRENGTH - 250 N/MM2
10. ALL COVER & STIFFENING PLATE ARE OF 6MM. THICK.
11. FOR GAS - 45 - 2012 FOR MIST MILLED MEDIUM AND HIGH TENSILE STRUCTURAL STEEL SPECIFICATIONS.
12. FOR GAS - B - 2011 FOR MILD TO MEDIUM AND HIGH SECTION.

PROJECT SPECIFICATION

1. THE SET SAFE BEARING CAPACITY OF SOIL DETAILED AS 10 TON/SQ.MT. 1.0m DEPTH FROM THE PLINTH FOR FLOOR.

SIGNING AUTHORITY

PROJECT ENGINEER	PROJECT LEADER
CHECKED BY	CONSULTANT

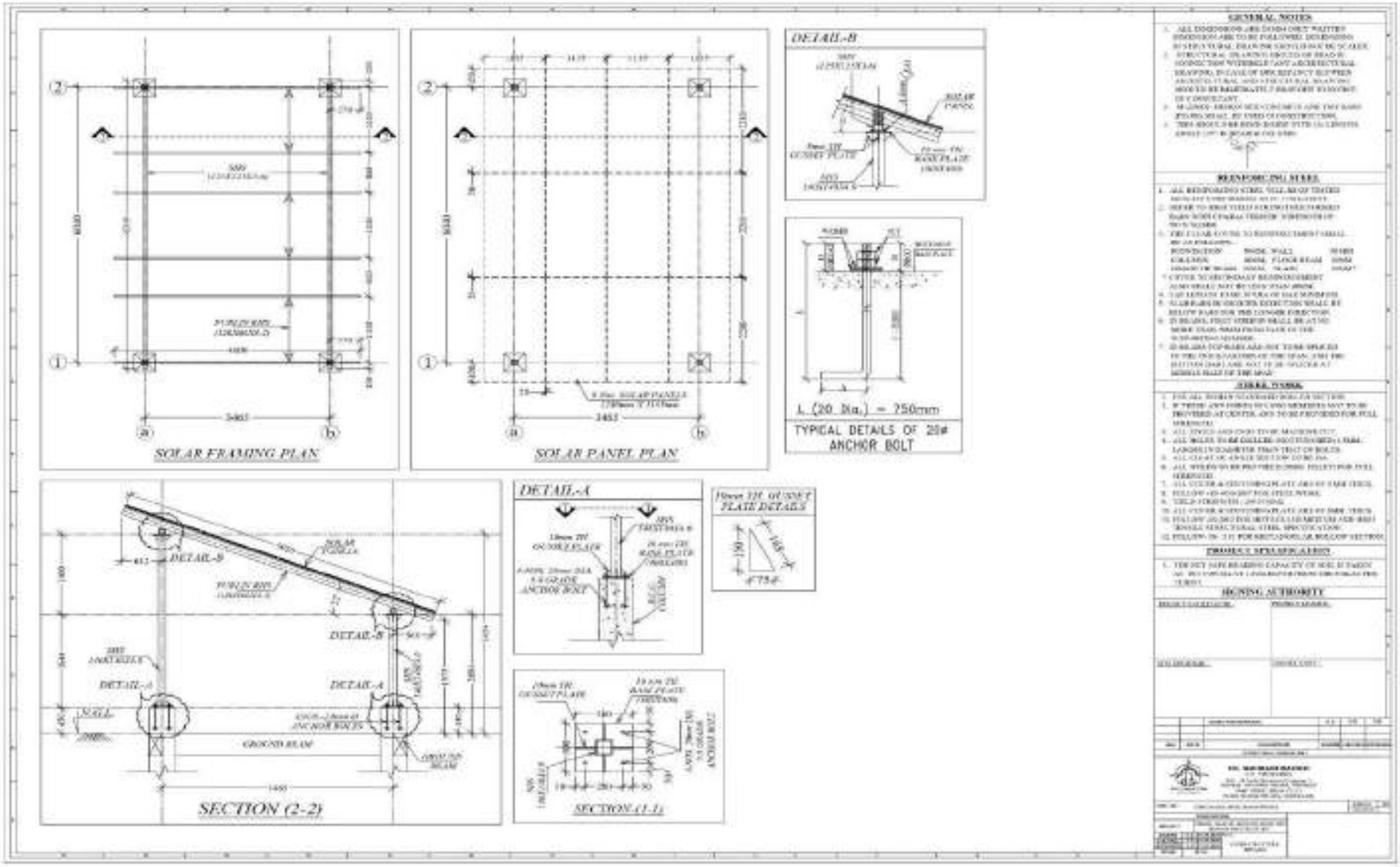
SOLAR FRAMING PLAN
SOLAR PANEL PLAN
DETAIL-B
L (20 Dia.) = 750mm
TYPICAL DETAILS OF 20ø ANCHOR BOLT
SECTION (2-2)
DETAIL-A
SECTION (1-1)
GENERAL NOTES
REINFORCING STEEL
STEEL WORK
PROJECT SPECIFICATIONS
HOUSING AUTHORITY

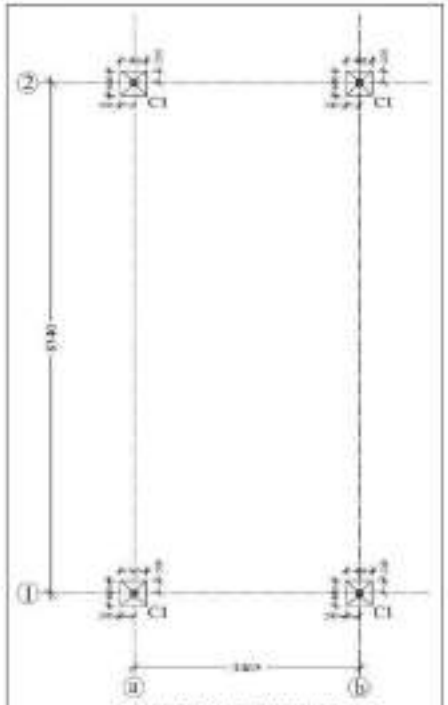

COLUMN CENTERLINE PLAN

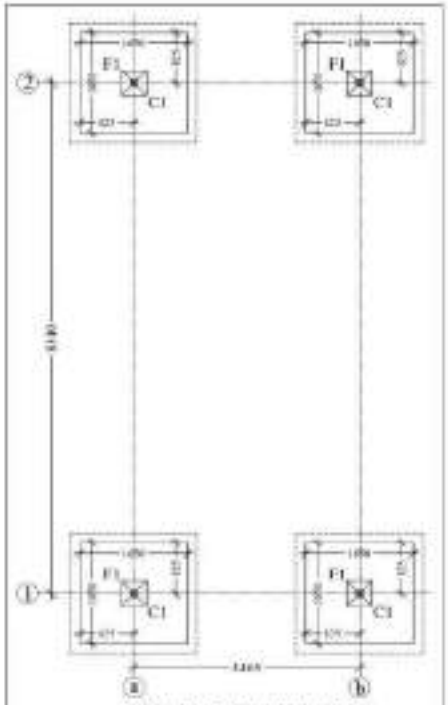

FOOTING CENTERLINE PLAN

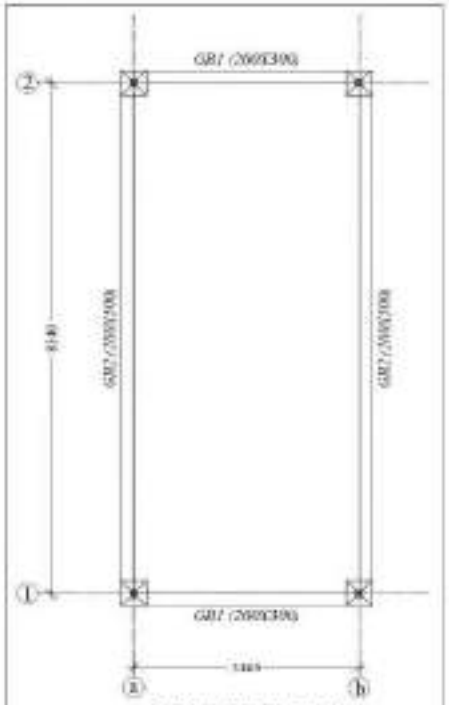

GROUND BEAM PLAN

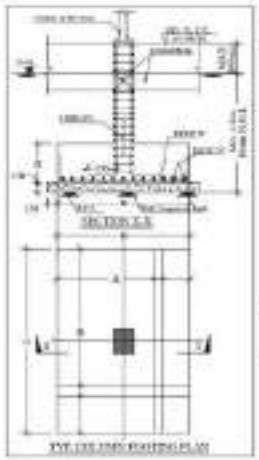

TYPICAL FOOTING PLAN

COLUMN SCHEDULE (M20:Fe500)

UP-TO TOP	M20 : Fe500
	LINKS
	400
	4-T16+4-T12
SIZE	400 X 400
COLUMN MARKED	C1

GROUND BEAM DETAIL

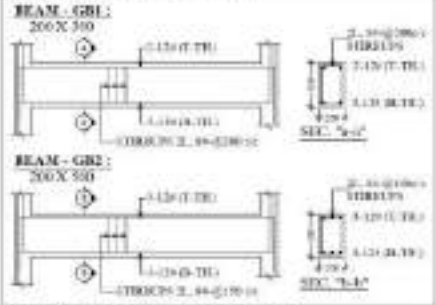

FOOTING SCHEDULE (M20:Fe500)

FOOTING NUMBERS	FOOTING TYPE	FOOTING SIZE		D	BOTTOM REINFORCEMENT		TOP REINFORCEMENT	
		L	B		MAIN	DIST.	MAIN	DIST.
F1	BOX	1656	1656	375	T10-@200c/c	T10-@200c/c	T10-@200c/c	T10-@200c/c

GENERAL NOTES

REINFORCING STEEL

STEEL WORK

PROJECT SPECIFICATION

SIGNING AUTHORITY

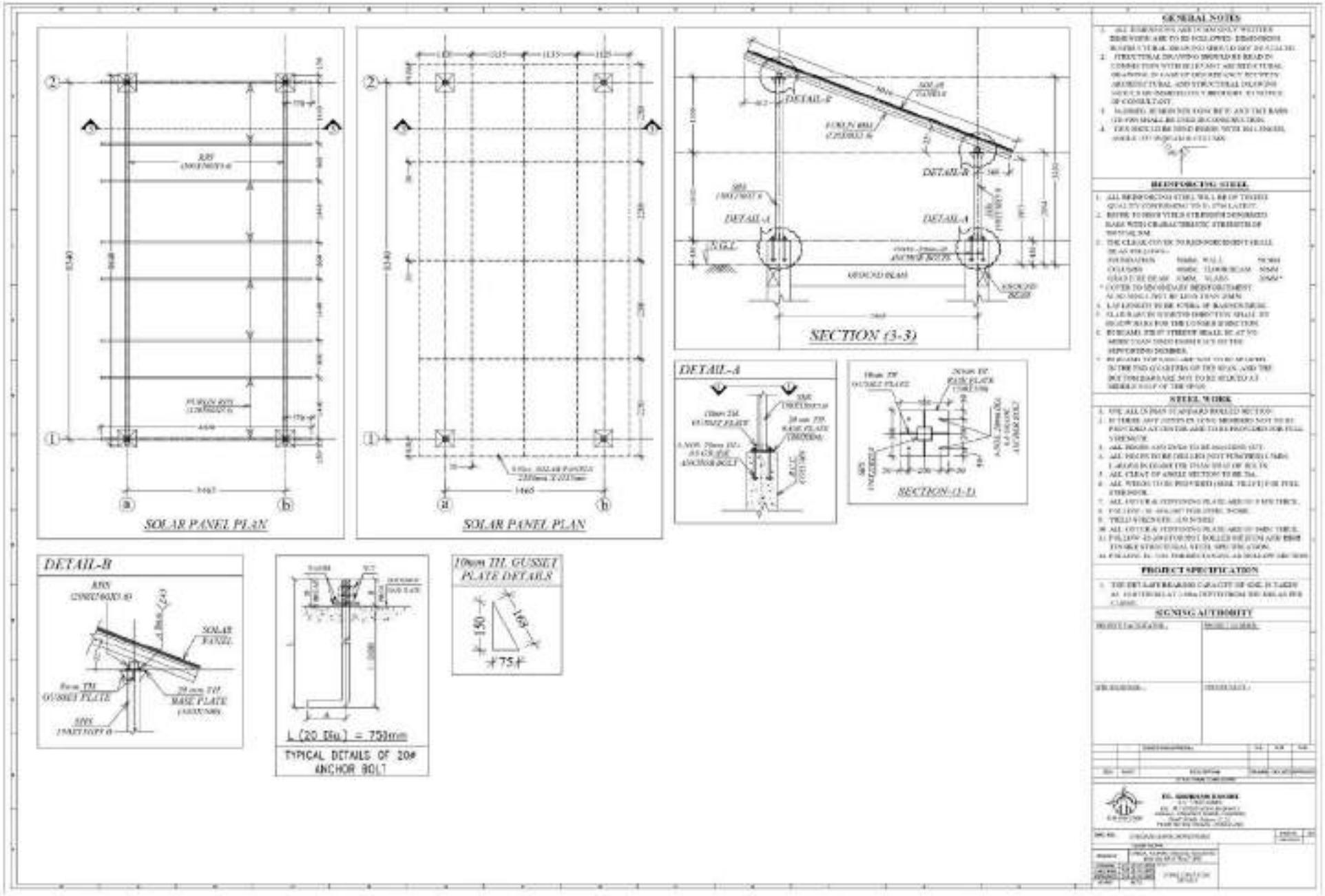
SOLAR PANEL PLAN
SOLAR PANEL PLAN
SECTION (3-3)
DETAIL-A
SECTION-(1-1)
DETAIL-B
SOLAR PANEL
10mm THK GUSSET PLATE
BASE PLATE
L (20 Dia) = 750mm
TYPICAL DETAILS OF 20# ANCHOR BOLT
10mm THK GUSSET PLATE DETAILS
150
163
75
GENERAL NOTES
REINFORCING STEEL
STEEL WORK
PROJECT SPECIFICATION
SIGNING AUTHORITY

REFERENCE DRAWINGS

DWG No. ----------

CIRCUIT DIAGRAM

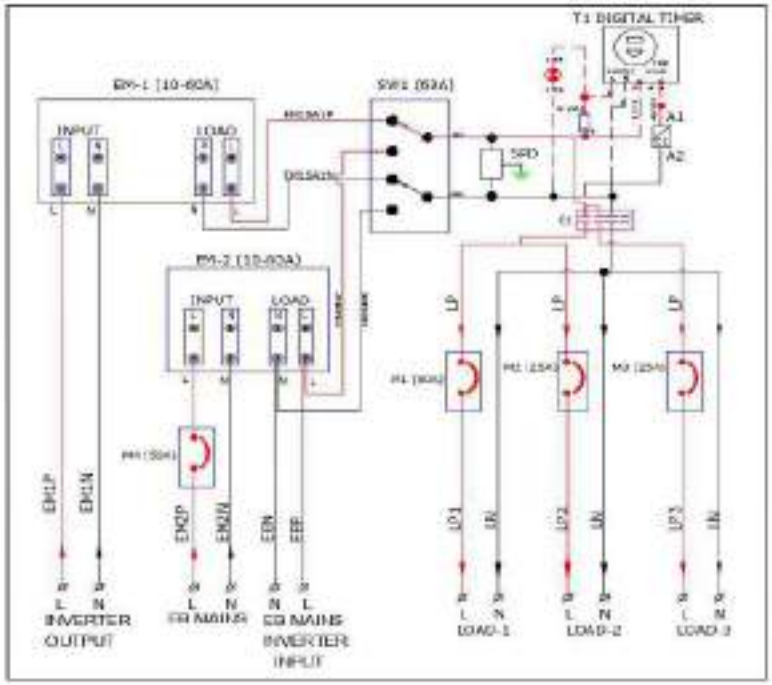

NOTE:

- POWER CABLES
- CONTROL CABLES

BILL OF MATERIALS					
SL.NO	CKT REF	ITEM DESCRIPTION	QTY	UNIT	MAKE
1	EM-1, EM-2	DIGITAL ELECTRONIC ENERGY METER 6W(H) 10-60A	02	Nos	L&T/SECURE/REPUTED
2	F1	FUSE BASE TB4 WITH END PLATE	01	No	PHOENIX/ REPUTED
3	F1	GLASS FUSE LINK 50mm x 5x20mm	01	No	PROTECTRON
4	SW1	CHANGEOVER SWITCH 63A, 2 POLE ,DRIVY	01	No	TELEMECHANIQUE/SCHNEIDER/REPUTED
5	SPD	SURGE PROTECTION DEVICE 1 PHASE	01	No	CHOKHA/PUSHING
6	L1	POWER ON 1AMP LED 230/240V AC, GREEN COLOUR	01	No	TRINEC / WISHNO / REPUTED
7	T1	DIGITAL PROGRAMMABLE TIMER MODEL T10NH	01	No	ISILEC / REPUTED
8	C1	CONTACTOR KRZ0-40/10 220-240 AC	01	No	ABB / REPUTED
9	M1,M2	1 POLE MCB 25A, 230VAC	02	Nos	SCHNEIDER / ABB /C&S/REPUTED
10	M3,M4	1 POLE MCB 50A, 230VAC	01	No	SCHNEIDER/ ABB /C&S/REPUTED
11	MAINS, PCU & INVERTER	CABLE GLAND PG - 16	03	Nos	JSD / ACTIVE /REPUTED
12	FEEDERS	CABLE GLAND PG - 16	03	Nos	JSD / ACTIVE/REPUTED
13	MAINS, PCU,INVERTER	TERMINAL BLOCKS TB16	06	Nos	PHOENIX / ELMO/REPUTED
14	FEEDERS	TERMINAL BLOCKS TB16	06	Nos	PHOENIX / ELMO/REPUTED
15	----	END PLATES	06	Nos	PHOENIX / ELMO/REPUTED
16	----	END CLAMPS	01	LOT	PHOENIX / ELMO/REPUTED
17	----	LUGS FOR INTERNAL WIRING	01	LOT	IDI REPUTED
18	----	2.5SQMM&4 50MM YELLOW/GREEN COLOR CABLE	01	LOT	RR/POLYCAB/REPUTED
19	----	CABLES • POWER CABLE 10SQMM • CONTROL CABLE 1.5SQMM	01	LOT	RR /POLYCAB/REPUTED
20	----	ENERGY METER GLASS COVERS	02	Nos	REPUTED
21	----	PACKING BOX	01	No	REPUTED

ENCLOSURE DETAILS

01	• DIMENSION : 600 X 800 X 120 MM (TYPICAL) • THICKNESS : 1.2MM • MATERIAL GRADE : MS(TRANSPARENT) • COATING THICKNESS : 80 MICRONS • FINISHING : POWDER COATING • CABLE ENTRY : BOTTOM • MOUNTING : WALL	REPUTED

LABEL : 1. DETAIL CIRCUIT DIAGRAM SHALL BE PASTED ON THE LID
2. DANGER SYMBOL SHALL BE PASTED ON THE ENCLOSURE

DESCRIPTION

THIS SHALL CONSIST OF BOX OF SUITABLE POWDER COATED METAL CASING. ONE FEEDER PER PHASE SHALL BE PROVIDED IN ACDB WITH MCB OF SUITABLE CAPACITY INSTALLED AT EACH FEEDER IN THE ACDB. ONE ELECTRONIC ENERGY METER, 10 MAKE SINGLE / THREE PHASE, OF GOOD QUALITY SHALL BE INSTALLED IN ACDB SUITABLE PLACE TO MEASURE THE CONSUMPTION OF POWER FROM SPV POWER PANEL. PROVISION THE MAINS SHALL BE INSTALLED AT EACH FEEDER IN CASE OF SINGLE PHASE OUTPUT ALSO. THERE SHALL BE THREE FEEDERS TO PROTECT FROM THE SHORT CIRCUIT CURRENT AS PER THE REQUIREMENT OF THE STC & INSTRUCTIONS OF CREDA. A SEPARATE DEDICATED FLOOR FROM NON-INFLAMMABLE LIKE TOP FLUSH WALL AS MORE SUITABLE, SHALL BE PROVIDED IF REQUIRED AS PER CREDA'S INSTRUCTION. A SEPARATE BUNDLE BYCO SWITCH FOR TRIPPING RATING SHOULD ALSO BE OUT VALT INSTALLED IN THE ACDB TO ISOLATE THE EXISTING CONNECTED LOAD FROM THE SOLAR SYSTEM & OFFER THE POWER TO THE EXISTING LOAD FROM CONVENTIONAL POWER SUPPLY IN CASE OF EMERGENCY. ACDB PANEL IS CONNECTED BETWEEN PCU & LOAD. SEPARATE ELECTRONIC ENERGY METERS SHOULD BE INSTALLED FOR INCOMING AND OUTGOING CIRCUITS OF ACDB FOR SPVPS OF CAPACITY MORE THAN 1 KWP.

REV.	DATE	DESCRIPTION	DRAWN	CHKD.	APPD.

CHHATTISGARH STATE RENEWABLE ENERGY DEVELOPMENT AGENCY (CREDA)

ACDB 8KW DUAL ENERGY METER WITH TIMER CREDA

DRAWN	CHKD.	APPD.	SHEET 1 OF 1
DATE 20.06.20	DATE 20.06.20	DATE 20.06.20	REV.0

DWG No. F03.01.0334 — SHEET SIZE A4

REFERENCE DRAWINGS	
DWG No.	----------

CIRCUIT DIAGRAM

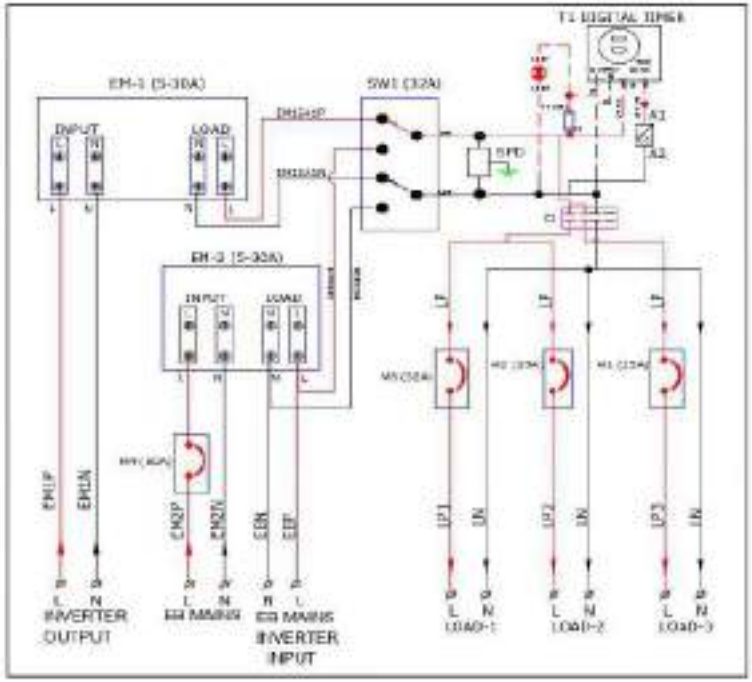

NOTE:

- POWER CABLES
- CONTROL CABLES

DESCRIPTION

[illegible]

BILL OF MATERIALS

SL.NO	CKT REF	ITEM DESCRIPTION	QTY	UNIT	MAKE
1	EM - 1 & EM - 2	DIGITAL ELECTRONIC ENERGY METER (MAX 05-30A	02	Nos	LNT SECURE/REPUTED
2	F1	FUSE BASE TS-4 WITH END PLATE	01	No.	PHOENIX/REPUTED
3	F1	GLASS FUSE LINK 5Amps,5x20mm	01	No.	PROTECTRON
4	SW1	CHANGEOVER SWITCH 32A,2 POLE,2WAY	01	No.	TELEMECHANIQUE/REPUTED
5	SPD	SURGE PROTECTION DEVICE 1 PHASE	01	No.	PHOENIX/FINDER
6	L1	POWER ON LAMP LED 230/220V AC GREEN COLOR	01	No.	TEKNIC / VAISHNO / REPUTED
7	T1	DIGITAL PROGRAMMABLE TIMER MODEL T03M1	01	No.	SELEC/REPUTED
8	C1	CONTACTOR A63-30-10 220-230 AC	01	No.	ABB / REPUTED
9	M1,M2	1 POLE MCB 25A, 230VAC	02	Nos	SCHNEIDER / ABB /C&S/REPUTED
10	MB	1 POLE MCB 32A, 230VAC	01	No.	SCHNEIDER / ABB /C&S/REPUTED
11	MN	1 POLE MCB 63A, 230VAC	01	No.	SCHNEIDER / ABB /C&S/REPUTED
12	MAINS , PCU & INVERTER	CABLE GLAND PG - 16	03	Nos	JISCO / ACTIVE /REPUTED
13	FEEDERS	CABLE GLAND PG - 16	03	Nos	JISCO / ACTIVE/REPUTED
14	MAINS, PCU/INVERTER	TERMINAL BLOCKS TB16	06	Nos	PHOENIX / SUNEER/REPUTED
15	FEEDERS	TERMINAL BLOCKS TB16	06	Nos	PHOENIX / SUNEER/REPUTED
16	----	END PLATES	06	Nos	PHOENIX / SUNEER/REPUTED
17	----	END CLAMPS	01	LOT	PHOENIX / SUNEER/REPUTED
18	----	GLUE FOR TERMINAL WIRING	01	LOT	SR/REPUTED
19	----	2.5SQMM 50MM YELLOW/GREEN COLOR CABLE	01	LOT	RR POLYCAB/REPUTED
20	----	CABLES • POWER CABLE 4SQMM • CONTROL CABLE 1.5SQMM	01	LOT	RR POLYCAB/REPUTED
21	----	ENERGY METER GLASS COVERS	02	Nos	REPUTED
22	----	PACKING BOX	01	No.	REPUTED

ENCLOSURE DETAILS

E1	• DIMENSION : 400X 400X 200MM (TYPICAL) • THICKNESS : 1.2MM • COATING MATERIAL : RAL 7035(SMOKE GREY) • COATING THICKNESS : 80 MICRONS • FINISHING : POWDER COATING • CABLE ENTRY : BOTTOM • MOUNTING : WALL	REPUTED

LABEL :- 1. DETAIL CIRCUIT DIAGRAM SHALL BE PASTED ON THE LID
2. DIMENSIONING SHALL BE PASTED ON THE ENCLOSURE

REV.	DATE	DESCRIPTION	DRAWN	CHKD.	APPD.
--	--	----------	---	----	--

CHHATTISGARH STATE RENEWABLE ENERGY DEVELOPMENT AGENCY (CREDA)

ACDB 6KW WITH DUAL ENERGY METER & TIMER CREDA

DRAWN	CHKD.	APPD.	SHEET
[illegible]	[illegible]	[illegible]	1 OF 1
DATE 20.06.18	DATE 20.06.18	DATE 20.06.18	REV.0

DWG No. F03.01.05

SHEET SIZE A4

REFERENCE DRAWINGS	
DWG No.	----------

CIRCUIT DIAGRAM

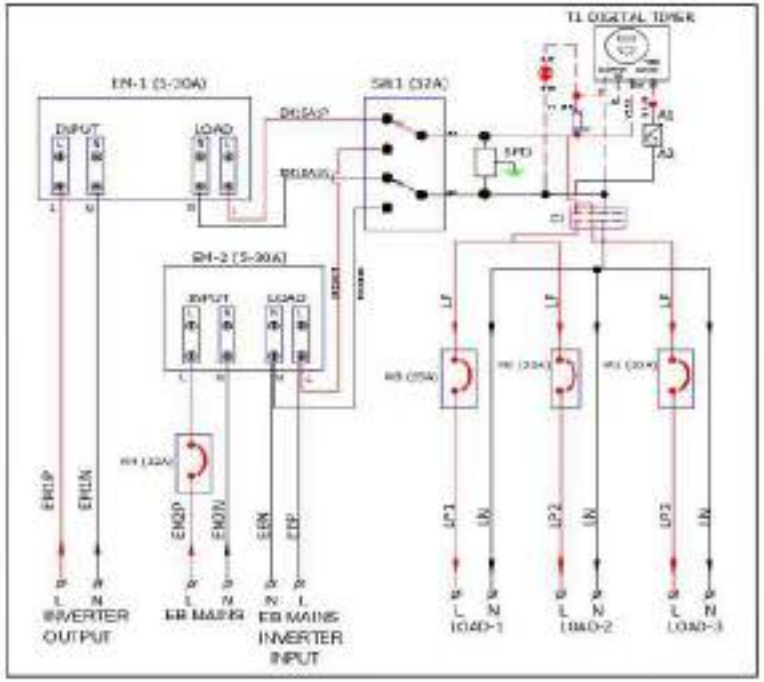

NOTE:
- POWER CABLES
- CONTROL CABLES

DESCRIPTION

[illegible]

BILL OF MATERIALS					
SL.NO	CKT REF	ITEM DESCRIPTION	QTY	UNIT	MAKE
1	EM - 1 & EM - 2	DIGITAL ELECTRONIC ENERGY METER (WPM) 05-50A	02	Nos	LECTRICUM/REPUTED
2	F1	FUSE BASE TB-4 WITH END PLATE	01	No	PHOENIX/REPUTED
3	F1	GLASS FUSE LINK 5A/mm,5x20mm	01	No	PROTECTION
4	SW1	CHANGEOVER SWITCH 32A 2 POLE 2WAY	01	No	TELEMONTALZER/WT/REPUTED
5	SPD	SURGE PROTECTION DEVICE 1 PHASE	01	No	PHOENIX/REPUTED
6	L1	POWER ON LAMP (LED) 230/220V AC GREEN COLOR	01	No	TEMIC / VASHNO / REPUTED
7	T1	DIGITAL PROGRAMMABLE TIMER MODEL-TE201	01	No	SELEC / REPUTED
8	C1	CONTACTOR AC1 35-6 230-230 AC 1SBL01 07-R0010	01	No	ABB/ REPUTED
9	M1,M2	1 POLE MCB 20A, 230VAC	02	Nos	SCHNEIDER/ ABB /C&S/REPUTED
10	M3	1 POLE MCB 25A, 230VAC	01	No	SCHNEIDER/ ABB /C&S/REPUTED
11	M4	1 POLE MCB 32A, 230VAC	01	No	SCHNEIDER/ ABB /C&S/REPUTED
12	MAINS , PV & INVERTER	CABLE GLAND PG - 16	03	Nos	JIGO / ACTIVE/REPUTED
13	FEEDERS	CABLE GLAND PG - 16	03	Nos	JIGO / ACTIVE/REPUTED
14	MAINS PV&INVERTER	TERMINAL BLOCKS TB10	06	Nos	PHOENIX/ ELREX/REPUTED
15	FEEDERS	TERMINAL BLOCKS TB10	06	Nos	PHOENIX/ ELREX/REPUTED
16	----	END PLATES	06	Nos	PHOENIX/ ELREX/REPUTED
17	----	END CLAMPS	01	LOT	PHOENIX/ ELREX/REPUTED
18	----	[illegible] FOR INTERNAL WIRING	01	LOT	KEY/REPUTED
19	----	2.5SQMM&4.5QMM YELLOW/GREEN COLOR CABLE	01	LOT	RR/POLYCAB/REPUTED
20	----	CABLES • POWER CABLE 4SQMM • CONTROL CABLE 1.5SQMM	01	LOT	RR/POLYCAB/REPUTED
21	----	ENERGY METER GLASS COVERS	02	Nos	REPUTED
22	----	ENCLOSING BOX	01	No	REPUTED

ENCLOSURE DETAILS		
01	• DIMENSION : 400X 300 X 200 MM (TYPICAL) • THICKNESS : 1.2 MM • COATING SHADE : RAL 7035 (MEDIUM GREY) • COATING THICKNESS : 80 MICRONS • FINISHING : POWDER COATING • CABLE ENTRY : BOTTOM • VENTILATION : [illegible]	REPUTED

LABEL : - 1. DETAIL CIRCUIT DIAGRAM SHALL BE PASTED ON THE LID
2. DRAWING SYMBOLS/VISUAL MUST PASTED ON THE ENCLOSURE

DEV.	DATE	DESCRIPTION	DRAWN	CHECKED	APPR.
---	---	----------	---	----	---

CHHATTISGARH STATE RENEWABLE ENERGY DEVELOPMENT AGENCY (CREDA)

ACDB 5KW WITH DUAL ENERGY METER & TIMER CREDA

DRAWN	CHECKED	APPR.	SHEET
[illegible]	[illegible]	[illegible]	1 OF 1
DATE 20.06.19	DATE 20.06.19	DATE 20.06.19	REV.0

DWG No. F03.01.0487 — SHEET SIZE A4

REFERENCE DRAWINGS	
DWG No.	----------

CIRCUIT DIAGRAM

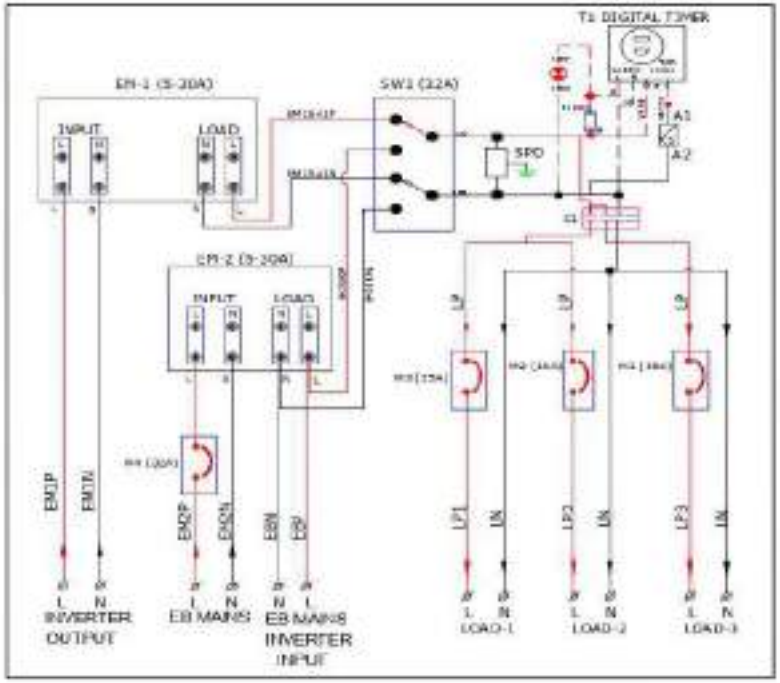

NOTE:
- POWER CABLES
- CONTROL CABLES

DESCRIPTION

[illegible]

BILL OF MATERIALS

SL.NO	CKT REF	ITEM DESCRIPTION	QTY	UNIT	MAKE
1	EM - 1 & EM - 2	DIGITAL ELECTRONIC ENERGY METER [illegible]	02	Nos	LEYPRECURT/ELITES
2	F1	FUSE BASE TS-4 WITH END PLATE	01	No	PHOENIX/REPUTED
3	F1	GLASS FUSE UNIT 5Amps 5x20mm	01	No	PROTECTRON
4	SW1	CHANGEOVER SWITCH 32A,2 POLE,2WAY	01	No	TELEMON/SALZERGIT/REPUTED
5	SPD	SURGE PROTECTION DEVICE 1 PHASE	01	No	PHOENIX/FINDER
6	L1	POWER ON LAMP (RED) 230/220V AC GREEN COLOR	01	No	TEKNIC / VAISHNO / REPUTED
7	T1	DIGITAL PROGRAMMABLE TIMER MODEL:T520V1	01	No	[illegible] / REPUTED
8	C1	CONTACTOR [illegible]	01	No	ABB / REPUTED
9	M1,M2	1 POLE MCB 16A, 230VAC	02	Nos	SCHNEIDER / ABB/C&S/REPUTED
10	M3	1 POLE MCB 25A, 230VAC	01	No	SCHNEIDER / ABB/C&S/REPUTED
11	M4	1 POLE MCB 20A, 230VAC	01	No	SCHNEIDER / ABB/C&S/REPUTED
12	MAINS , PCU & INVERTER	CABLE GLAND PG - 16	03	Nos	JIGO / ACTIVE/REPUTED
13	FEEDERS	CABLE GLAND PG - 16	03	Nos	JIGO / ACTIVE/REPUTED
14	MAINS, PCU/INVERTER	TERMINAL BLOCKS TB10	06	Nos	PHOENIX / ELMEX/REPUTED
15	FEEDERS	TERMINAL BLOCKS TB10	06	Nos	PHOENIX / ELMEX/REPUTED
16	----	END PLATES	06	Nos	PHOENIX / ELMEX/REPUTED
17	----	END COVERS	01	LOT	PHOENIX / ELMEX/REPUTED
18	----	LUGS FOR INTERNAL WIRING	01	LOT	[illegible]/REPUTED
19	----	2.5SQMM/4.50MM YELLOW/GREEN COLOR CABLE	01	LOT	RR /POLYCAB/REPUTED
20	----	CABLES • POWER CABLE 4SQMM • CONTROL CABLE 1.5SQMM	01	LOT	RR /POLYCAB/REPUTED
21	----	ENERGY METER GLASS COVERS	02	Nos	REPUTED
22	----	PACKING BOX	01	No	REPUTED

ENCLOSURE DETAILS

01	• DIMENSION : 400 X 300 X 120 MM (TYPICAL) • THICKNESS : 1.2 MM • COATING SHADE : RAL 7035(LIGHT GREY) • COATING THICKNESS : 80 MICRONS • FINISHING : POWDER COATING • CABLE ENTRY : BOTTOM • MOUNTING : WALL	REPUTED

LABEL : 1. DETAIL CIRCUIT DIAGRAM SHALL BE PASTED ON THE LID
2. CHANNEL SYMBOL SHALL BE PASTED ON THE ENCLOSURE

Rev	Date	Description	Drawn	Chkd. 1	Appr.
—	—	————	--	----	---

CHHATTISGARH STATE RENEWABLE ENERGY DEVELOPMENT AGENCY (CREDA)

ACDB 4KW WITH DUAL ENERGY METER & TIMER CREDA

DRAWN	CHKD.	APPR.	SHEET 1 OF 1
[illegible]	[illegible]	[illegible]	
DATE 20.01.19	DATE 20.01.19	DATE 20.01.19	REV. 0

DWG No. F03.01.04 — SHEET SIZE A4

REFERENCE DRAWINGS	
DWG No.	

CIRCUIT DIAGRAM

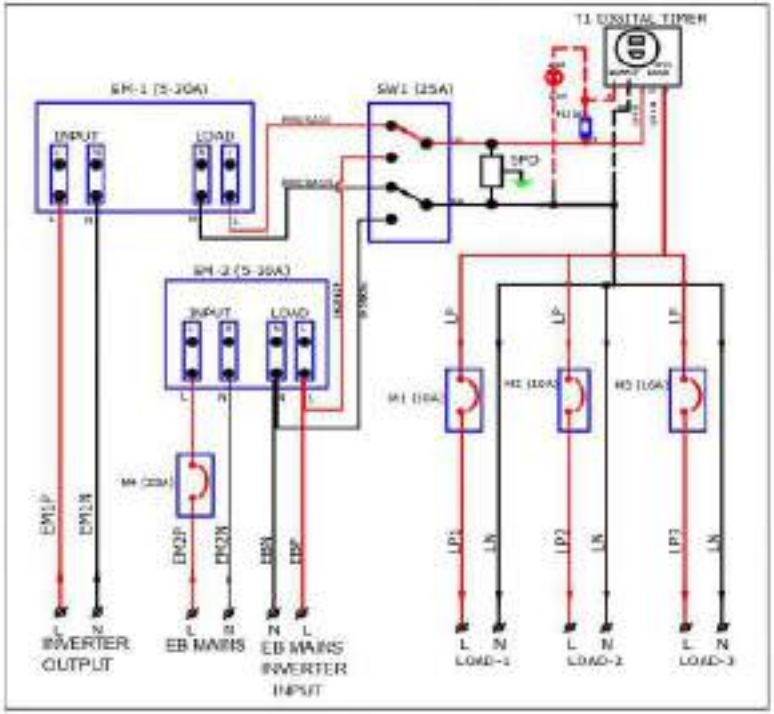

NOTE:
- POWER CABLES
- CONTROL CABLES

DESCRIPTION

THIS SHALL CONSIST OF BOX OF SUITABLE POWDER COATED METAL CASING, ONE FEEDER PER PHASE SHALL BE PROVIDED IN ACDB WITH MCB OF SUITABLE CAPACITY INSTALLED AT EACH FEEDER IN THE ACDB. ONE ELECTRONIC ENERGY METER, 3 WAYS SINGLE / THREE PHASE OF GOOD QUALITY SHALL ALSO BE INSTALLED IN ACDB SUITABLE PLACED TO MEASURE THE CONSUMPTION OF POWER FROM SPV POWER PLANT. PROPER RATING MCB SHALL BE INSTALLED AT EVERY FEEDER. IN CASE OF SINGLE PHASE OUTPUT ALSO, THERE SHALL BE THREE FEEDERS TO PROTECT FROM THE SHORT CIRCUIT CURRENT AS PER THE REQUIREMENT OF THE VITA ENVIRONMENT ORG OF CREDA. A SEPARATE DEDICATED PADLOCK FROM CONVENTIONAL GRID LINE TO PCU AS WELL AS ACDB SHOULD ALSO BE INSTALLED, IF REQUIRED AS PER CREDA'S INSTRUCTION. A SEPARATE DUAL MCB SWITCH OF PROPER RATING SUITABLE ALSO BE EARLY INSTALLED IN THE ACDB TO ISOLATE THE CAPTIVE OWNER'S LOAD FROM THE SOLAR SYSTEM, GATED THE POWER TO THE CAPTIVE LOAD FROM CONVENTIONAL POWER GRID. ACDB OF EMERGENCY. ACDB SHOULD BE CONNECTED BETWEEN PCU & LOAD. SEPARATE ELECTRONIC ENERGY METERS SHOULD BE INSTALLED FOR INDOORS AND OUTDOORS CIRCUITS OF ACDB FOR SPV PLANT OF CAPACITY MORE THAN 1 KWP.

BILL OF MATERIALS

SL NO	CKT REF	ITEM DESCRIPTION	QTY	UNIT	MAKE
1	EM-1 & EM-2	DIGITAL ELECTRONIC ENERGY METER (AVR 1.05-10A)	02	Nos	LATISCOLORE/REPUTED
2	F1	FUSE BASE TB-4 WITH END PLATE	01	No	PHOENIX/REPUTED
3	F1	GLASS FUSE LINK 5A (10x38,5x20mm)	01	No	PROTECTRON
4	SW1	CHANGEOVER SWITCH 25A,2 POLE,2WAY	01	No	TELEMECANIQUE/GE/REPUTED
5	SPD	SURGE PROTECTION DEVICE 1 PHASE	01	No	PHOENIX/FINDER
6	L1	POWER ON LAMP (LED) 230/220V AC GREEN COLOR	01	No	TEKNIC / VASHIKO / REPUTED
7	T1	DIGITAL PROGRAMMABLE TIMER MODEL TC2M	01	No	SELEC / REPUTED
8	M1 M2	1 POLE MCB 10A, 230VAC	02	Nos	SCHNEIDER / ABB /C&S/REPUTED
9	M4	1 POLE MCB 25A, 230VAC	02	Nos	SCHNEIDER / ABB /C&S/REPUTED
10	M3	1 POLE MCB 10A, 230VAC	01	No	SCHNEIDER / ABB /C&S/REPUTED
11	MAINS, PCU & INVERTER	CABLE GLAND PG - 16	03	Nos	ARCO / ACTIVE /REPUTED
12	FEEDERS	CABLE GLAND PG - 16	03	Nos	ARCO / ACTIVE/REPUTED
13	MAINS, PCU & INVERTER	TERMINAL BLOCKS TB10	06	Nos	PHOENIX / ELMEX/REPUTED
14	FEEDERS	TERMINAL BLOCKS TB10	06	Nos	PHOENIX / ELMEX/REPUTED
15	----	END PLATES	06	Nos	PHOENIX / ELMEX/REPUTED
16	----	END CLAMPS	01	LOT	PHOENIX / ELMEX/REPUTED
17	----	LUGS FOR INTERNAL WIRING	01	LOT	3M /REPUTED
18	----	2.5SQMM/4 SQMM YELLOW/GREEN COLOR CABLE	01	LOT	RR/POLYCAB/REPUTED
19	----	CABLES • POWER CABLE 4SQMM • CONTROL CABLE 1.5SQMM	01	LOT	RR/POLYCAB/REPUTED
20	----	ENERGY METER GLASS COVERS	03	Nos	REPUTED
21	----	PADLOCK BOX	01	No	REPUTED

ENCLOSURE DETAILS

E1	• DIMENSION : 400 MM X 120 MM (TYPICAL) • THICKNESS : 1.2 MM • COATING SHADE : POLYESTER BLUE GREY • COATING THICKNESS : 80 MICRONS • FINISHES : POWDER COATING • CABLE ENTRY : BOTTOM • MOUNTING : WALL	REPUTED

LABEL :- 1. DETAIL CIRCUIT DIAGRAM SHALL BE PASTED ON THE LID
2. DANGER SYMBOL SHALL BE PASTED ON THE BOX COLORE

REV.	DATE	DESCRIPTION	DRAWN	CHKD.	APPR.

CREDA

CHHATTISGARH STATE RENEWABLE ENERGY DEVELOPMENT AGENCY (CREDA)

ACDB 3KW DUAL ENERGY METER WITH TIMER CREDA

DRAWN	CHKD.	APPR.	SHEET
H.S.S	VEH	GRM	1 OF 1
DATE	DATE	DATE	REV. 0
30.06.13	30.06.13	30.06.13	

DWG No. F03.01.0011 — SHEET SIZE A4

REFERENCE DRAWINGS	
DWG No.	----------

CIRCUIT DIAGRAM

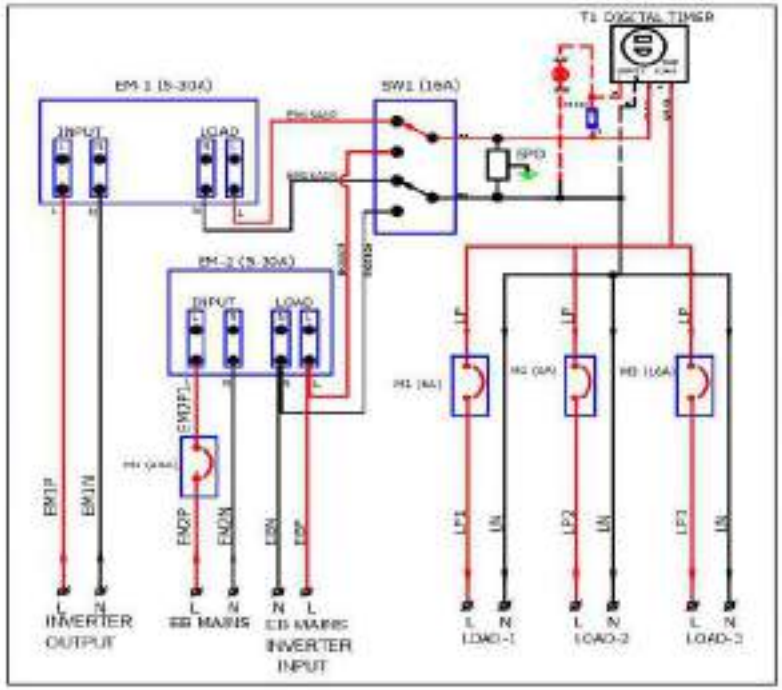

NOTE:
- POWER CABLES
- CONTROL CABLES

DESCRIPTION

THIS SHALL CONSIST OF 20% OF SUITABLE POWER SPIT CONSTITUTE CHANGE. ONE FEEDER PER PANEL SHALL BE REVERSED IN ACDB WITH ONE OF SUITABLE CAPACITY INSTALLED AT EACH FEEDER IN THE ACDB. ONE ELECTRONIC ENERGY METER, IN CASE SINGLE / THREE PHASE OF GOOD QUALITY SHALL ALSO BE INSTALLED IN ACDB WITHIN PLACED TO REGISTER THE CONSUMPTION OF POWER FROM SPV POWER PLANT. PROPER RATING MCB SHALL BE INSTALLED AT EVERY FEEDER. IN CASE OF SINGLE PHASE CIRCUIT ALSO, THERE SHALL BE THREE PHASE MCB TO PROTECT THE MISTAKES FROM THE SHORT CIRCUIT CURRENT AS PER THE REQUIREMENT OF THE SITE & INSTRUCTIONS OF CREDA. A SEPARATE DEDICATED FEEDER FROM CONVENTIONAL GRID LINE TO FOLLOW WILL ALSO ACDB SHOULD ALSO BE INSTALLED. IF REQUIRED AS PER CREDA INSTRUCTION A SEPARATE CHARGE OVER WATER OF PROPER RATING SHOULD ALSO BE SUITABLY INSTALLED WITH ACDB TO ISOLATE THE EXISTING CONNECTED LOAD FROM THE SOLAR SYSTEM. AFTER THE POWER TO THE EXISTING LOAD FROM COMMERCIAL POWER MAINS. IN CASE OF SINGLE PHASE ACDB SYSTEM BE CONNECTED BETWEEN THE 3 WAY SEPARATE SUBSYSTEMS. ENERGY METERS SHOULD BE INSTALLED FOR INCOMING AND OUTGOING CIRCUITS OF ACDB FOR SYSTEM OF CAPACITY MORE THAN 7 KWP.

BILL OF MATERIALS

SL.NO	CKT. REF	ITEM DESCRIPTION	QTY	UNIT	MAKE
1	EM - 1 & EM - 2	DIGITAL ELECTRONIC ENERGY METER (5W-H) 05-30A	02	Nos	L&T/SECURE/REPUTED
2	F2	FUSE BASE TB-2 WITH END PLATE	01	No	PHOENIX/REPUTED
3	F2	GLASS FUSE LINK 5A/6x32mm	01	No	PROTECTOR
4	SW1	CHANGEOVER SWITCH 16A,2 POLE,2WAY	01	No	TELEMECHANIQUE/REPUTED
5	SPD	[illegible]	01	No	PHOENIX/REPUTED
6	L1	POWER ON LAMP (LED) 230/220V AC GREEN COLOR	01	Nos	[illegible] / VAISHNO / REPUTED
7	T1	DIGITAL PROGRAMMABLE TIMER, MODEL: TS-DNT	01	Nos	[illegible] / REPUTED
8	M1/M2	1 POLE, M10/16A, 230VAC	02	Nos	ACTHERDER / ABB/CAG/REPUTED
9	M3, M4	1 POLE, M10/16A, 230VAC	02	Nos	COINCIDER / ABB/CAG/REPUTED
10	MAINS, POLE & INVERTER	CABLE GLAND PG - 16	04	Nos	JAGO / ACTIVE/REPUTED
11	FEEDERS	CABLE GLAND PG - 16	03	Nos	JAGO / ACTIVE/REPUTED
12	MAINS, POLE/INVERTER	TERMINAL BLOCKS TB10	06	Nos	PHOENIX / ELMEX/REPUTED
13	FEEDERS	TERMINAL BLOCKS TB10	06	Nos	PHOENIX / ELMEX/REPUTED
14	------	END PLATES	06	Nos	PHOENIX / ELMEX/REPUTED
15	------	END CLAMPS	01	LOT	PHOENIX / ELMEX/REPUTED
16	------	LUGS FOR INTERNAL WIRING	01	LOT	3D/ REPUTED
17	------	2.5SQMM 4 CORE YELLOW/GREEN COLOR CABLE	01	LOT	RR / POLYSAB/REPUTED
18	------	CABLES • POWER CABLE 4SQMM • CONTROL CABLE 1.5SQMM	01	LOT	RR / POLYSAB/REPUTED
19	------	ENERGY METER GLASS COVERS	02	Nos	REPUTED
20	------	PACKING BOX	01	No	REPUTED

ENCLOSURE DETAILS

01	• DIMENSION : 400 X 400 X 120 MM (TYPICAL) • THICKNESS : 1.2 MM • COATING SHADE : RAL 7035 (LIGHT GREY) • COATING THICKNESS : 80 MICRONS • FINISHED : POWDER COATED • CABLE ENTRY : BOTTOM • MOUNTING : WALL	REPUTED

LABEL - 1. DETAIL CIRCUIT DIAGRAM SHALL BE PASTED ON THE LID
2. DANGER SYMBOL SHALL BE PASTED ON THE ENCLOSURE

REV	DATE	DESCRIPTION	DRAWN	CHKD_1	APPD

CREDA

CHHATTISGARH STATE RENEWABLE ENERGY DEVELOPMENT AGENCY (CREDA)

ACDB 2KW DUAL ENERGY METER WITH TIMER CREDA

DRAWN	CHKD.	APPD.	SHEET
H.S.J	VSN	[illegible]	1 OF 1
DATE 30.06.19	DATE 10.06.19	DATE 20.06.19	REV 0

DWG No. F03.01.0006

SHEET SIZE: A4

REFERENCE DRAWINGS

DWG No. ----------

CIRCUIT DIAGRAM

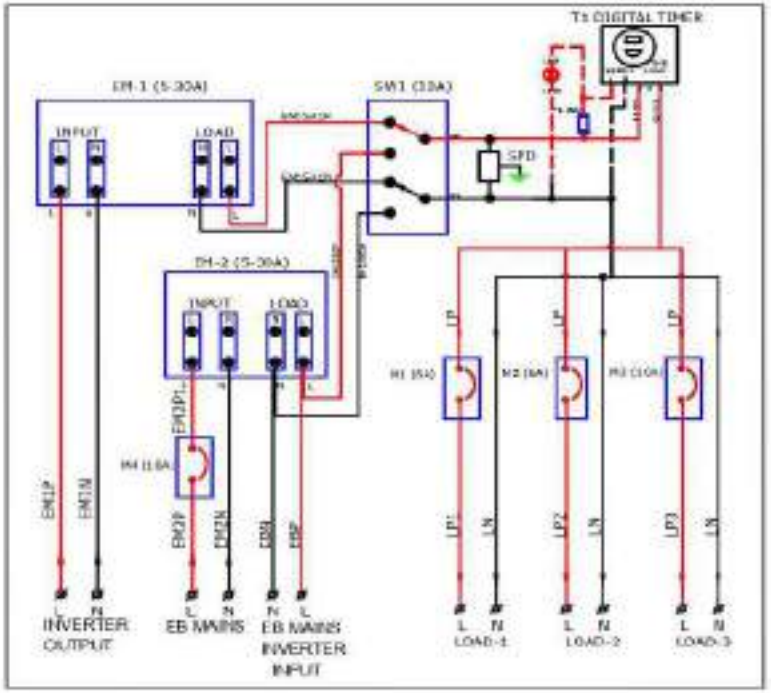

NOTE:

- POWER CABLES
- CONTROL CABLES

DESCRIPTION

THIS SHALL CONSIST OF BOX OF SUITABLE POWDER COATED METAL CASING. ONE FEEDER PER PHASE SHALL BE PROVIDED IN ACDB WITH MCB OF SUITABLE CAPACITY INSTALLED AT EACH FEEDER IN THE ACDB. ONE ELECTRONIC ENERGY METER, 3-PHASE SINGLE / THREE PHASE OF GOOD QUALITY SHALL ALSO BE INSTALLED IN ACDB EXTERNAL PLACE TO MEASURE THE CONSUMPTION OF POWER FROM SPV POWER PLANT. PROPER RATING MCB SHALL BE INSTALLED AT EVERY FEEDER (IN CASE OF SINGLE PHASE OUTPUT LOAD, THERE SHALL BE THREE FEEDERS) TO PROTECT PREVENT FROM THE SHORT CIRCUIT CURRENT AS PER THE REQUIREMENT OF THIS STE & NOT OUTGOING OF SPCDA. A GUARANTEED DEDICATED FEEDER FROM CONVENTIONAL GRID (SEE TO FCU AS ABOVE) AS ACDB SHOULD ALSO BE INSTALLED, IF REQUIRED AS PER CREDA'S INSTRUCTION. A SWITCH & CHANGEOVER SWITCH (INTERLOCKING) SHOULD ALSO BE SUPPLY INSTALLED IN THE ACDB TO ISOLATE THE EXISTING CONNECTED LOAD FROM THE SOLAR SYSTEM & GIVE THE POWER TO THE EXISTING LOAD FROM CONVENTIONAL POWER GRID. IN CASE OF EMERGENCY, ACDB SHOULD BE CONNECTED BETWEEN FCU & LOAD. SEPARATE ELECTRONIC ENERGY METERS SHOULD BE INSTALLED FOR INCOMING AND OUTGOING CIRCUITS OF ACDB FOR SPV PTE OF CAPACITY MORE THAN 1 MW.

BILL OF MATERIALS

SLNO	CKT REF	ITEM DESCRIPTION	QTY	UNIT	MAKE
1	EM-1 & EM-2	DIGITAL ELECTRONIC ENERGY METER (kWh) 5(30)A	02	Nos	L&T/SECURE/REPUTED
2	F1	FUSE BASE TD-4 WITH END PLATE	01	No	PHOENIX/ REPUTED
3	F1	GLASS FUSE LINK (Area 5x20mm)	01	No	PROTECTION
4	SW1	CHANGEOVER SWITCH 10A, 2 POLE 2WAY	01	No	TELEMECHANIQUE/SCHNEIDER/REPUTED
5	SPD	SURGE PROTECTION DEVICE 1 PHASE	01	No	PHOENIX/PRIMEO
6	L1	POWER 'ON' LAMP (LED) 230/220V AC GREEN COLOR	01	No	TEKNIC (VAISHNO.) REPUTED
7	T1	DIGITAL PROGRAMMABLE TIMER MODEL TS28M1	01	No	SELEC / REPUTED
8	M1,M4	1 POLE MCB 10A, 230VAC	02	Nos	SCHNEIDER / ABB /C&S/REPUTED
9	M1, M3	1 POLE MCB 5A, 230VAC	02	No	SCHNEIDER/ ABB /C&S/REPUTED
10	MAINS , FCU & INVERTER	CABLE GLAND PG - 16	03	Nos	JSCO / ACTIVE /REPUTED
11	FEEDERS	CABLE GLAND PG - 16	03	Nos	JSCO / ACTIVE/REPUTED
12	MAINS, FCU,INVERTER	TERMINAL BLOCKS TB6	06	Nos	PHOENIX / ELMEX/REPUTED
13	FEEDERS	TERMINAL BLOCKS TB6	06	Nos	PHOENIX / ELMEX/REPUTED
14	----	END PLATES	03	Nos	PHOENIX / ELMEX/REPUTED
15	----	END CLAMPS	01	LOT	PHOENIX / ELMEX/REPUTED
16	----	LUGS FOR INTERNAL WIRING	01	LOT	3D/ REPUTED
17	----	2.5SQMM & 50MM YELLOW GREEN COLOR CABLE	01	LOT	RR-POLYCAB/REPUTED
18	----	CABLES + POWER CABLE (400M) + CONTROL CABLE (100MM)	01	LOT	RR/POLYCAB/REPUTED
19	----	ENERGY METER GLASS COVERS	02	Nos	REPUTED
20	----	MARKING BOX	01	No	REPUTED

ENCLOSURE DETAILS

01	+ DIMENSION : 400 X 400 X 120 MM (TYPICAL) + THICKNESS : 1.2MM + COATING SHADE : RAL 7035(MATRIX-MRP) + COATING THICKNESS : 40 MICRONS + FINISHED : POWDER COATED + CABLE ENTRY : BOTTOM + MOUNTING : WALL	REPUTED

LABEL :- 1. DETAIL CIRCUIT DIAGRAM SHALL BE PASTED ON THE LID.
2. DANGER SYMBOL SHALL BE PASTED ON THE ENCLOSURE

REV.	DATE	DESCRIPTION	DRAWN	CHKD_A	APPR.

CREDA

CHHATTISGARH STATE RENEWABLE ENERGY DEVELOPMENT AGENCY (CREDA)

ACDB 1KW DUAL ENERGY, TIMER CREDA

DRAWN	CHKD.	APPR.	SIZE
[illegible]	[illegible]	[illegible]	1 OF 1
DATE	DATE	DATE	REV.0
20-06-23	20-06-23	20-06-23	

DWG No. F03.01.0534 — SHEET SIZE A4

REFERENCE DRAWINGS	
DWG No.	

CIRCUIT DIAGRAM

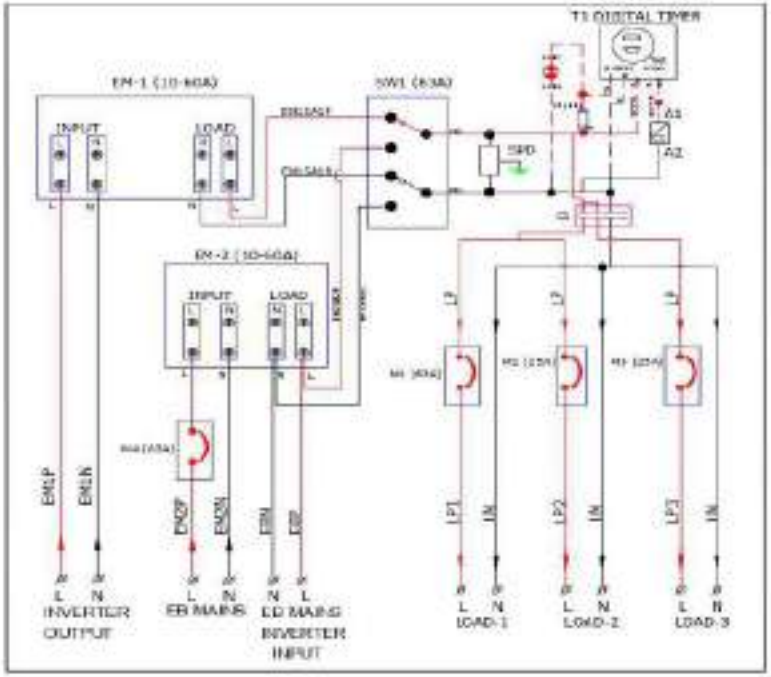

NOTE

- POWER CABLES
- CONTROL CABLES

DESCRIPTION

THIS SHALL CONSIST OF BOX OF SUITABLE POWDER COATED METAL CASING. ONE FEEDER, ONE PHASE SHALL BE PROVIDED IN ACDB WITH MCB OF SUITABLE CAPACITY INSTALLED AT EACH FEEDER IN THE ACDB. ONE ELECTRONIC ENERGY METER, BI-MANUAL SWITCH / THREE PHASE OF RATED QUALITY SHALL ALSO BE INSTALLED IN ACDB SUITABLE PLACED TO MEASURE THE CONSUMPTION OF POWER FROM DIFFERENT POWER PLANT. PROVISION FOR THE MCB SHALL BE INCLUDED AT EVERY FEEDER IN CASE OF MAIN PHASE OUTPUT ALSO. THERE SHALL BE THERMAL RELAY TO PROTECT FEEDERS FROM THE SHORT CIRCUIT CURRENT. NO FOR THE REQUIREMENT OF THE SITE & NO TRUE KIND OF COLOR. A SEPARATE INDICATED FEEDER FROM [illegible] A SEPARATE SHARE OVER SWITCH OF PROPER RATING SHALL ALSO BE SUITABLY INSTALLED IN THE ACDB TO ISOLATE THE SYSTEM CONNECTED LOAD FROM THE POWER SYSTEM & OPTIMUM PRIORITY TO THE ROOF TOP LOAD FROM OPTIONAL POWER SUPPLY. IN CASE OF EMERGENCY ACDB PROVIDE CONNECTED BETWEEN THE LOAD TEMPORARY FOR THE ENERGY METERS SHOULD BE INSTALLED FOR MEASURING THE OUTGOING PROJECTS OF ACDB FOR SPARE OF CAPACITY MORE THAN 1 KWP.

BILL OF MATERIALS

SL.NO	CKT REF	ITEM DESCRIPTION	QTY	UNIT	MAKE
1	EM - 1 & EM - 2	DIGITAL ELECTRONIC ENERGY METER 4 WIN 10-60A	02	Nos	L&T/SECURE/REPUTED
2	F1	FUSE BASE TB-4 WITH END PLATE	01	No	PHOENIX/ REPUTED
3	F1	GLASS FUSE LINK 5Amp 5x20mm	01	No	PROTECTRON
4	SW1	CHANGOVER SWITCH 63A 3 POLE 2WAY	01	No	TRUMPH/SIGNAL/ORIENT/REPUTED
5	SPD	SURGE PROTECTION DEVICE 1 PHASE	01	No	PHOENIX/FINDER
6	L1	POWER ON LAMP (LED) 230/230V AC GREEN COLOR	01	No	TCONIX / VAGANO / REPUTED
7	T1	DIGITAL PROGRAMMABLE TIMER MODEL 132M1	01	No	SELEC / REPUTED
8	C1	CONTACTOR AC06-30-10 220-230 AC	01	No	ABB / REPUTED
9	M1, M2	1 POLE MCB 25A, 230VAC	02	Nos	SCHNEIDER / MDS/C60/REPUTED
10	M1, M4	1 POLE MCB 40A, 230VAC	01	No	SCHNEIDER/ MDS/C60/REPUTED
11	MAINS, PCU & INVERTER	CABLE (NAME PO - 16	03	Nos	JIDO / ACTIVE /REPUTED
12	FEEDERS	CABLE (NAME PO - 16	03	Nos	JIDO / ACTIVE/REPUTED
13	MAINS, PCU & INVERTER	TERMINAL BLOCKS TB14	06	Nos	PHOENIX / ELMEX/REPUTED
14	FEEDERS	TERMINAL BLOCKS TB14	06	Nos	PHOENIX / ELMEX/REPUTED
15	----	END PLATES	06	Nos	PHOENIX / ELMEX/REPUTED
16	----	END CLAMPS	01	LOT	PHOENIX / ELMEX/REPUTED
17	----	LUGS FOR INTERNAL WIRING	01	LOT	3D/ REPUTED
18	----	4 SQ.MM/4 SQMM YELLOW/GREEN COLOR CABLE	01	LOT	KEI/ POLYCAB/REPUTED
19	----	CABLES • POWER CABLE 6SQMM • CONTROL CABLE 1.5SQMM	01	LOT	KEI /POLYCAB/REPUTED
20	----	ENERGY METER GLASS COVERS	02	Nos	REPUTED
21	----	PACKING BOX	01	No	REPUTED

ENCLOSURE DETAILS

01	• DIMENSION : [illegible] (TYPICAL) • THICKNESS : 1.2 MM • COATING SHADE : RAL 7035 (LIGHT GREY) • COATING THICKNESS : 80 MICRONS • FINISHING : POWDER COATING • CABLE ENTRY : BOTTOM • MOUNTING : WALL	REPUTED

LABEL - 1. DETAIL CIRCUIT DIAGRAM SHALL BE PASTED ON THE LID
2. DANGER SYMBOL SHALL BE PASTED ON THE ENCLOSURE

REV.	DATE	DESCRIPTION	DRAWN	CHECKED	APPR.

CHHATTISGARH STATE RENEWABLE ENERGY DEVELOPMENT AGENCY (CREDA)

ACDB 10KW DUAL ENERGY METER WITH TIMER CREDA

DWG No. F03.01.0334

A4

REFERENCE DRAWINGS

DWG No. ----------

CIRCUIT DIAGRAM

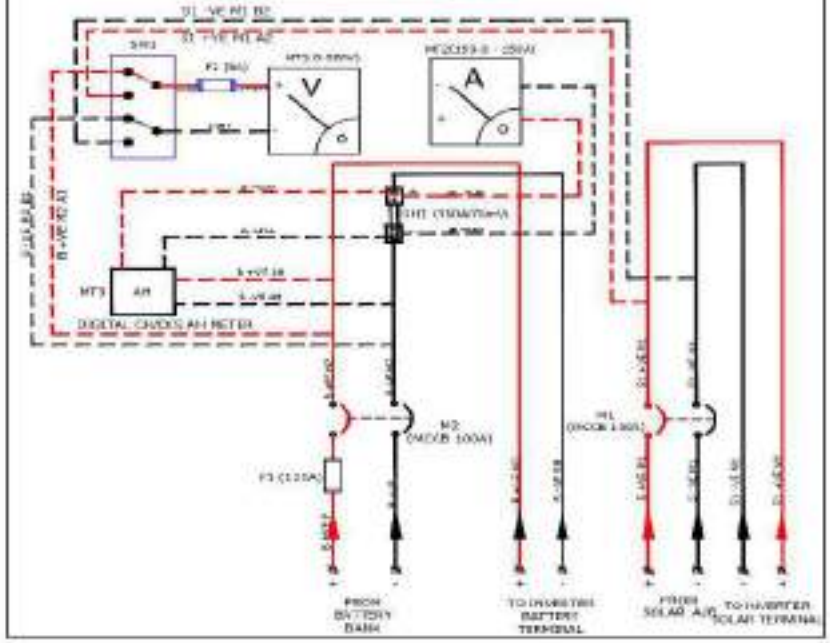

NOTE:

- 8 KW SYSTEM VOLTAGE (120V) 100-280VDC
- POWER CABLES
- CONTROL CABLES

BILL OF MATERIALS

SLNO	CRT REF	ITEM DESCRIPTION	QTY	UNIT	MAKE
1	F1	HRC FUSE BASE (SOLAR RATED)	01	No	C&S / INDOSAW / REPUTED
2	F1	HRC FUSE LINK (SOLAR RATED)	01	No	C&S / INDOSAW / REPUTED
3	F2	FUSE BASE TB-4 WITH END PLATE	01	No	PHOENIX / REPUTED
4	F2	GLASS FUSE LINK 6A, 5X20MM	01	No	PROTECTRON / REPUTED
5	M2	MCB 10A, 2 POLE, DC RATED	01	No	C&S / ABB / SCHNEIDER / REPUTED
6	M1	MCB 40A, 2 POLE, DC RATED	01	No	C&S / ABB / SCHNEIDER / REPUTED
7	SW1	16 CCS ROTARY SWITCH 2 POLE 2WAY	01	No	SALZER / TELEMECH / REPUTED
8	SH1	SHUNT 100A/75mV	01	No	E.C / KESHAB / REPUTED
9	MT1	DC ANALOG VOLT METER (0-300V), 96X96 X 45MM	01	No	E.C / KESHAB / REPUTED
10	MT2	DC ANALOG AMMETER, METER VOLTAGE 100V, SIZE 96 X 96mm	01	No	E.C / KESHAB / REPUTED
11	MT4	DIGITAL CUMULATIVE CHARGE AH METER OPERATING VOLTAGE 100 - 280VDC	01	No	E.C / KESHAB / COMMON / REPUTED
12	SOLAR	CABLE GLAND PG 16	04	Nos	ARCO / ACTIVE / REPUTED
13	BATTERY	CABLE GLAND PG 29	04	Nos	ARCO / ACTIVE / REPUTED
14	SOLAR & BATTERY	TERMINAL BLOCKS (DPMS) 95A	04	nos	PHOENIX / SIEMS / VIKKO / REPUTED
15	SOLAR & BATTERY	TERMINAL BLOCKS (DPMS) 95A	04	nos	PHOENIX / SIEMS / VIKKO / REPUTED
16	---	MAGNAMAN ISOLATOR	01	No	REPUTED
17	SOLAR & BATTERY	LUGS FOR INTERNAL WIRING	01	SET	- / REPUTED
18	---	CABLES / COPPER BUS BAR • POWER CABLE 2X50MM • CONTROL CABLE 1.5X6MM	01	SET	RR / POLYCAB / REPUTED
19	---	2.5 MM YELLOW/GREEN COLOR EARTHING CABLE	4.4	Mtr	RR / POLYCAB / REPUTED
20	---	INDICLAMPS	01	unit	PHOENIX / SIEMS / VIKKO / REPUTED
21	---	RFPS SLOT DIN RAIL CHANNEL LABELS, MOUNTING ACCESSORIES	01	SET	REPUTED
22	---	PACKING BOX	01	SET	REPUTED

ENCLOSURE DETAILS

01	• [illegible] • [illegible] • [illegible] • [illegible] • [illegible] • [illegible] • [illegible]	REPUTED

LABEL - 1. STAINLESS STEEL [illegible]

DESCRIPTION

THIS SHALL CONSIST OF SUITABLE POWDER COATED METAL CASING. IN THIS BOX A SEPARATE ARRANGEMENT WHICH SHALL CONSIST OF MCBS OF SUITABLE SPECIFICATIONS & WHICH CAN BITHOTTAMBERIPECTIVE FLOW OF CURRENT, WITH THE PURPOSE OF PROVIDING THE OPTION FOR ISOLATING THE BATTERY BANK & SPV ARRAYS SHOULD BE MADE. THERE SHALL BE COPPER BUS BARS OF SUITABLE RATING. PROPER RATING HRC FUSE & MCCB ISOLATOR FOR DC APPLICATION SHOULD BE SUITABLY INSTALLED IN DCDB AS BATTERY BANK ISOLATOR. BEST QUALITY AH METER HAS TO BE INSTALLED TO MEASURE THE CUMULATIVE CHARGING & DISCHARGING STATUS OF BATTERY BANK.

REV	DATE	DESCRIPTION	DRAWN	CHKD.	APPR.
---	---	---	---	---	---

CHHATTISGARH STATE RENEWABLE ENERGY DEVELOPMENT AGENCY (CREDA)

DCDB 8KW CREDA

DRAWN	CHKD.	APPR.	SHEET
K.S.S	VSK	[illegible]	1 OF 1
DATE 10.08.21	DATE 10.08.21	DATE 10.08.21	REV.0

DWG No. F03.02.007

SHEET SIZE A4

REFERENCE DRAWINGS	
DWG No.	--------

CIRCUIT DIAGRAM

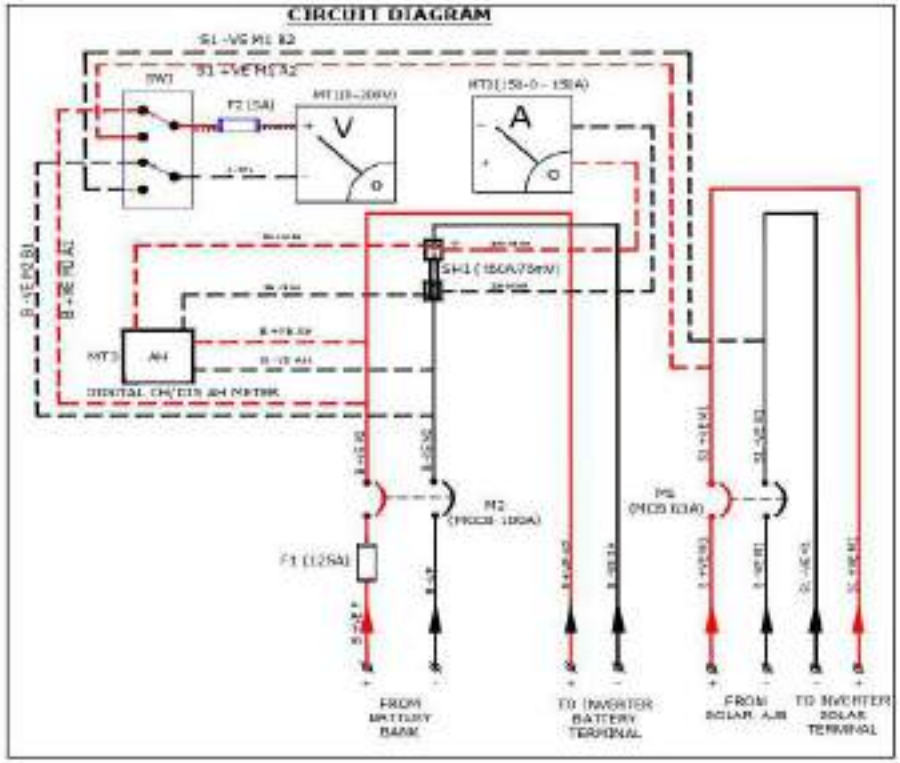

NOTE:

- 5KW SYSTEM VOLTAGE (96V) 80-170VDC
- —— POWER CABLES
- ------ CONTROL CABLES

BILL OF MATERIALS

SLNO	CKT REF	ITEM DESCRIPTION	QTY	UNIT	MAKE
1	F1	HRC FUSE BASE 160A, DC RATED	01	No	CGG
2	F1	FUSE LINK 125A DC RATED	01	No	CGG
3	F2	FUSE BASE TB4 WITH END PLATE	04	No	PHOENIX/REPUTED
4	F2	BLADE FUSE LINK 5A 500MV	04	No	PROTECTRON
5	M1	MCB 63A, 2P, U.V, DC RATED	01	No	CG/ABB/SCHNEIDER
6	M2	MCCB 100A, 2P, DC RATED	01	No	CG/ABB/SCHNEIDER
7	SW1	4A CGS ROTARY SWITCH	01	No	CALZER
8	SH1	SHUNT 150A/75MV	01	No	BCH/SHAB
9	MT1	DC ANALOG VOLT METER 0-200V, FLDR 96 X 96mm	01	No	BCH/SHAB
10	MT2	DC ANALOG AMMETER METER 150-0-150A, FLDR 96 X 96mm	01	No	BCH/SHAB
11	MT3	DIGITAL CUMULATIVE CHARGE AH METER OPERATING VOLTAGE 80-170V DC	01	No	BCH/SHABY (LANTON/REPUTED)
12	SOLAR	CABLE GLAND FO 16	04	Nos	JISO/WATTS/REPUTED
13	BATTERY	CABLE GLAND FO 20	04	Nos	JISO/WATTS/REPUTED
14	SOLAR & BATTERY	TERMINAL BLOCKS (STRIP) 16A RED COLOUR	04	Nos	PHOENIX / KUMKWADE
15	SOLAR & BATTERY	TERMINAL BLOCKS (STRIP) 16A BLACK COLOR	04	Nos	PHOENIX / KUMKWADE
16	---	MEGOHM ISOLATOR	01	No	REPUTED
17	SOLAR & BATTERY	LUGS FOR INTERNAL WIRING	01	LOT	AS/REPUTED
18	---	CABLES COPPER 2.5 SQMM • POWER CABLE 10SQMM • CONTROL CABLE 1.5SQMM	01	LOT	RR/FINOLEX/POLY CAB/REPUTED
19	---	2.5 SQMM YELLOW/GREEN COLOR EARTHING CABLE CRIMPING WITH 2.5 SQ-8 FERRULE USING 2VDO	02	Mtrs	RR/FINOLEX/POLY/REPUTED
20	---	END CLAMPS	04	Nos	PHOENIX / KUMKWADE
21	---	WIRE DUCT, DIN RAIL CHANNEL, LABELS, MOUNTING ACCESSORIES	01	LOT	REPUTED

ENCLOSURE DETAILS

01	• DIMENSION : 400 X 600 X 176 MM (TYPICAL) • THICKNESS : 1.2 MM • COATING SHADE : RAL 7035 (LIGHT GREY) • COATING THICKNESS : 60 MICRONS • FINISHING : POWDER COATING • CABLE ENTRY : BOTTOM • MOUNTING : WALL / FLOOR MOUNTING WITH FASTENERS	REPUTED

LABEL :- 1. DETAIL CIRCUIT DIAGRAM SHALL BE PASTED ON THE LID
2. DANGER SYMBOL SHALL BE PASTED ON THE ENCLOSURE

DESCRIPTION

THIS SHALL CONSIST OF SUITABLE POWDER COATED METAL CASING, IN THIS BOX A SEPARATE ARRANGEMENT WHICH SHALL CONSIST OF MCCBS OF SUITABLE SPECIFICATIONS & WHICH CAN WITHSTAND RESPECTIVE FLOW OF CURRENT, WITH THE PURPOSE OF PROVIDING THE OPTION FOR ISOLATING THE BATTERY BANK & SPV ARRAYS SHOULD BE MADE. THERE SHALL BE COPPER BUS BARS OF SUITABLE RATING. PROPER RATING HRC FUSE & MCCB/ISOLATOR FOR DC APPLICATION SHOULD BE SUITABLY INSTALLED IN DCDB AS BATTERY BANK ISOLATOR. BEST QUALITY AH METER HAS TO BE INSTALLED TO MEASURE THE CUMULATIVE CHARGING & DISCHARGING STATUS OF BATTERY BANK.

REV.	DATE	DESCRIPTION	DRAWN	CHKD.	APPR.

CHHATTISGARH STATE RENEWABLE ENERGY DEVELOPMENT AGENCY (CREDA)

DCDB-6KW- CREDA

DRAWN	CHKD	APPR.	SHEET
DATE	DATE	DATE	REV.
DWG No. F03.02.0061			SHEET SIZE A4

REFERENCE DRAWINGS

DWG No. ----------

CIRCUIT DIAGRAM

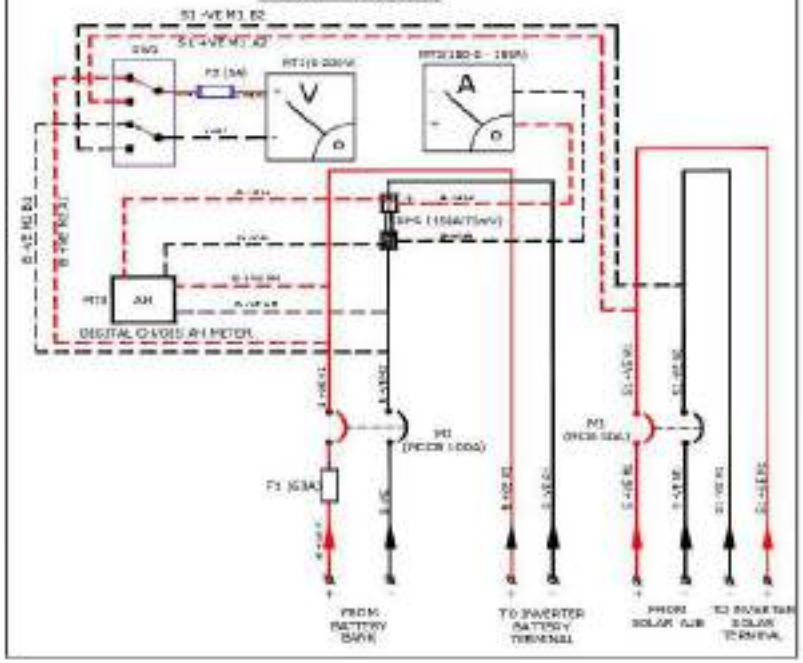

BILL OF MATERIALS					
SL.NO	ITEM REF	ITEM DESCRIPTION	QTY	UNIT	MAKE
1	F1	HRC FUSE BASE / ISOLATOR FITTED	01	No	GEC / INDIGRAM / REPUTED
2	F1	HRC FUSE LINK 63A DC RATED	01	No	GEC / INDIGRAM / REPUTED
3	F2	FUSE WIRE 16A WITH ENCLOSURE	01	No	PHEONIX / DEPUTED
4	F3	GLASS FUSELINK 5A SLOW	01	No	PHEONIX / REPUTED
5	MCB	MCB 16A, DP(SP), DC RATED	01	No	GEC / ABB / SCHNEIDER / REPUTED
6	MCB	MCB 10A, DP(SP), DC RATED	01	No	GEC / ABB / SCHNEIDER / REPUTED
7	SW1	BLADE ROTARY SWITCH 2 POLE 32AV	01	No	SALZER / TELEMECAN / REPUTED
8	SH1	SHUNT 100A/75mV	01	No	ECI / KIRHAB / REPUTED
9	MT1	DC ANALOG VOLT METER 0-300V, 96x96 X 35mm	01	No	ECI / KIRHAB / REPUTED
10	MT2	DC ANALOG AMMETER METER 0-50-100A, 96X96X35mm	01	No	ECI / KIRHAB / REPUTED
11	MT3	DIGITAL CUMULATIVE 0-1000 AH METER CAPACITY 100 VOLTAGE 48V - 120VDC	01	No	ECI / KIRHAB / COSTRON / REPUTED
12	SOLAR	CABLE GLAND PG16	04	Nos	JIGO / ACTIVE / REPUTED
13	BATTERY	CABLE GLAND PG16	04	Nos	JIGO / ACTIVE / REPUTED
14	SOLAR & BATTERY	TERMINAL BLOCKS / STRIP 100A	04	Nos	PHOENIX / CLEMCO / WAGO / REPUTED
15	SOLAR & BATTERY	TERMINAL BLOCKS / STRIP 100A	04	Nos	PHOENIX / CLEMCO / WAGO / REPUTED
16	----	[illegible]	01	No	[illegible]
17	SOLAR & BATTERY	LUGS FOR INTERNAL WIRING	04	LOT	JD / REPUTED
18	----	CABLES / COPPER BUS BAR • POWER CABLE 16SQMM • CONTROL CABLE 1.5SQMM	04	LOT	RR / POLYCAB / REPUTED
19	----	2.5SQMM YELLOW/GREEN COLOR EARTHING CABLE	1.0	Mtrs	RR / POLYCAB / REPUTED
20	----	END CLAMPS	01	LOT	PHOENIX / CLEMCO / WAGO / REPUTED
21	----	WIRE DUCT 25X25 / CHANNEL LABELS, MOUNTING ACCESSORIES	01	LOT	REPUTED
22	----	PACKING BOX	01	NO	REPUTED

INCLUDING DETAILS		
A	• [illegible] • [illegible] • [illegible] • [illegible] • [illegible] • [illegible] • [illegible] • [illegible]	[illegible]

NOTE:

- 5KW SYSTEM VOLTAGE (96V): 80-170VDC
- —— POWER CABLES
- —— CONTROL CABLES

DESCRIPTION

THIS SHALL CONSIST OF SUITABLE POWDER COATED METAL CASING. IN THIS BOX A SEPARATE ARRANGEMENT WHICH SHALL CONSIST OF MODES OF SUITABLE SPECIFICATIONS & WHICH CAN WITHSTAND RESPECTIVE FLOW OF CURRENT, WITH THE PURPOSE OF PROVIDING THE OPTION FOR ISOLATING THE BATTERY BANK & SPV ARRAYS SHOULD BE MADE. THERE SHALL BE COMPREHENSIVE BASED OF SUITABLE RATING. PROPER RATING HRC FUSE & MCCB ISOLATOR FOR DC APPLICATION SHOULD BE SUITABLY INSTALLED. INDICOR AS BATTERY BANK ISOLATOR. BEST QUALITY AH METER HAS TO BE INSTALLED TO MEASURE THE CUMULATIVE CHARGING & DISCHARGING STATUS OF BATTERY BANK.

REV	DATE	DESCRIPTION	DRAWN	CHKD.	APPR.

CHHATTISGARH STATE RENEWABLE ENERGY DEVELOPMENT AGENCY (CREDA)

DCDB-5KW CREDA

DRAWN	CHKD.	APPR.	SHEET
[illegible]	[illegible]	[illegible]	1 OF 1
DATE	DATE	DATE	REV.
[illegible]	[illegible]	[illegible]	

DWG No. F03.02.0027 — SHEET SIZE A4

REFERENCE DRAWINGS	
DWG No.	

CIRCUIT DIAGRAM

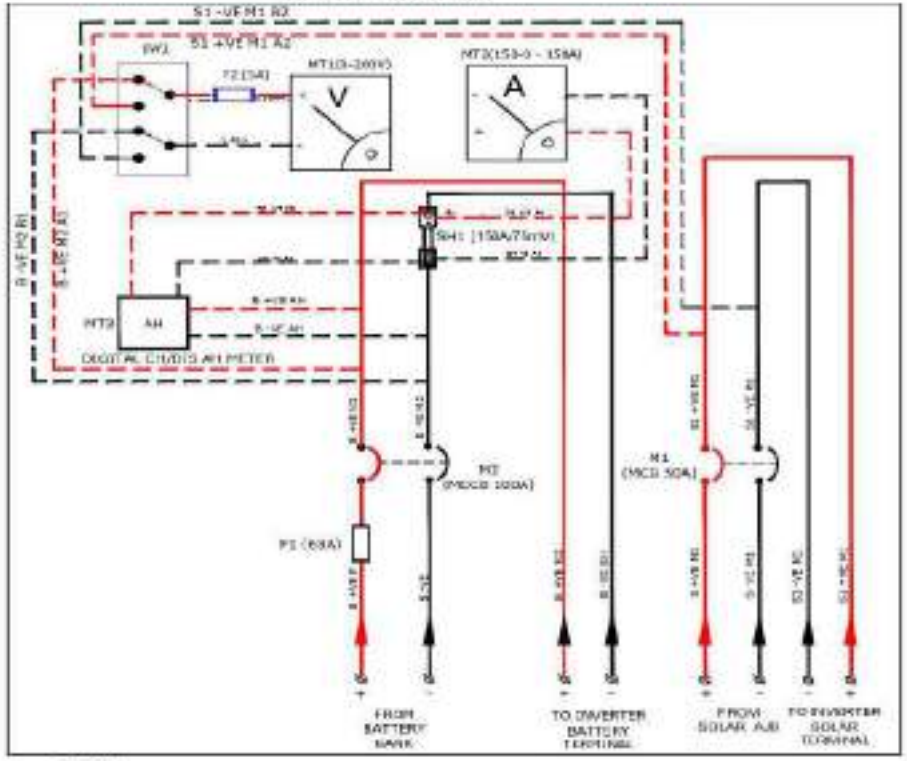

NOTE:

- 4KW SYSTEM VOLTAGE (96V) :80-170VDC
- ——— POWER CABLES
- ——— CONTROL CABLES

BILL OF MATERIALS

SL.NO	CAT REF	ITEM DESCRIPTION	QTY	UNIT	MAKE
1	F1	HRC FUSE BASE 1P(NO END PLATE)	01	No	C&S / MEGASAN / REPUTED
2	F1	HRC FUSE LINK 63A DO RATED	01	No	C&S / MEGASAN / REPUTED
3	F2	FUSE BASE 1P+N WITH END PLATE	01	No	PHOENIX / REPUTED
4	F2	GLASS FUSE LINK 5A (5X20MM)	01	No	[illegible] / REPUTED
5	M1	MCB 50A, 2POLE, 30 RATED	01	No	C&S / ABB / SCHNEIDER / REPUTED
6	M2	MCCB 100A,2POLE,DC RATED	01	No	C&S / ABB / SCHNEIDER / REPUTED
7	SW1	SELECTOR ROTARY SWITCH 2POLE,2WAY	01	No	BAUZER / TELEMAN / REPUTED
8	SH1	SHUNT 150A/75mV	01	No	[illegible] / REPUTED
9	MT1	DC ANALOG VOLT METER 0-300V, 72X72 X 85mm	01	No	[illegible] / REPUTED
10	MT2	DC ANALOG AMMETER METER 150-0-150A, 72X72 X 85mm	01	No	[illegible] / REPUTED
11	MT3	DIGITAL CUMULATIVE CHARGE AH METER OPERATING VOLTAGE 80- 170VDC	01	No	[illegible] / REPUTED
12	SOLAR	CABLE SLEEVE PG16	01	Nos	[illegible] / REPUTED
13	BATTERY	CABLE SLEEVE PG 29	01	Nos	[illegible] / REPUTED
14	SOLAR & BATTERY	TERMINAL BLOCKS (STRIP TYPE)	20	Nos	PHOENIX / ELMEX / WAGO / REPUTED
15	---	MICRO MAN INDICATOR	01	No	REPUTED
16	SOLAR & BATTERY	LUGS FOR TERMINAL BLOCKS	01	LOT	[illegible] / REPUTED
17	---	CABLES (COPPER M/S BAR) • POWER CABLE 16SQMM • CONTROL CABLE 1.5SQMM	01	LOT	RR / POLYCAB / REPUTED
18	---	1.5SQMM YELLOW/GREEN/BLUE/ COPPER CABLE	5.2	MTR	RR / POLYCAB / REPUTED
19	---	TAG CLAMPS	01	LOT	PHOENIX / ELMEX / WAGO / REPUTED
20	---	DIN RAIL CHANNEL LUGS, MOUNTING ACCESSORIES	01	LOT	REPUTED
21	---	CARTON PACKING BOX	01	NO	REPUTED

ENCLOSURE DETAILS

01	• DIMENSION: 400 X 300 X 175 MM (TYPICAL) • THICKNESS : 1.2 MM • COATING SHADE : RAL 7035(MENG GREY) • COATING THICKNESS : 80 MICRONS • CRAZING : POWDER COATING • CABLE ENTRY : BOTTOM • MOUNTING : WALL	REPUTED

LABEL :- 1. DETAIL CIRCUIT DIAGRAM SHALL BE PASTED ON THE LID.
2. DANGER SYMBOL SHALL BE PASTED ON THE ENCLOSURE

DESCRIPTION

THIS SHALL CONSIST OF SUITABLE POWDER COATED METAL CASING. IN THIS BOX A SEPARATE ARRANGEMENT WHICH SHALL CONSIST OF MCCBS OF SUITABLE SPECIFICATIONS & WHICH CAN WITHSTAND RESPECTIVE FLOW OF CURRENT, WITH THE PURPOSE OF PROVIDING THE OPTION FOR ISOLATING THE BATTERY BANK & SPV ARRAYS SHOULD BE MADE. THERE SHALL BE COPPER BUS BARS OF SUITABLE RATING. PROPER RATING HRC FUSE & MCCB ISOLATOR FOR DC APPLICATION SHOULD BE SUITABLY INSTALLED IN DCDB AS BATTERY BANK ISOLATOR. BEST QUALITY AH METER HAS TO BE INSTALLED TO MEASURE THE CUMULATIVE CHARGING & DISCHARGING STATUS OF BATTERY BANK.

REV.	DATE	DESCRIPTION	DRAWN	CHKD.	APPR.

CHHATTISGARH STATE RENEWABLE ENERGY DEVELOPMENT AGENCY (CREDA)

DCDB 4KW CREDA MODE

DRAWN	CHKD.	APPR.	SHEET
DATE	DATE	DATE	REV.
DWG No. F03.02.0003			A4

REFERENCE DRAWINGS	
DWG No.	----------

CIRCUIT DIAGRAM

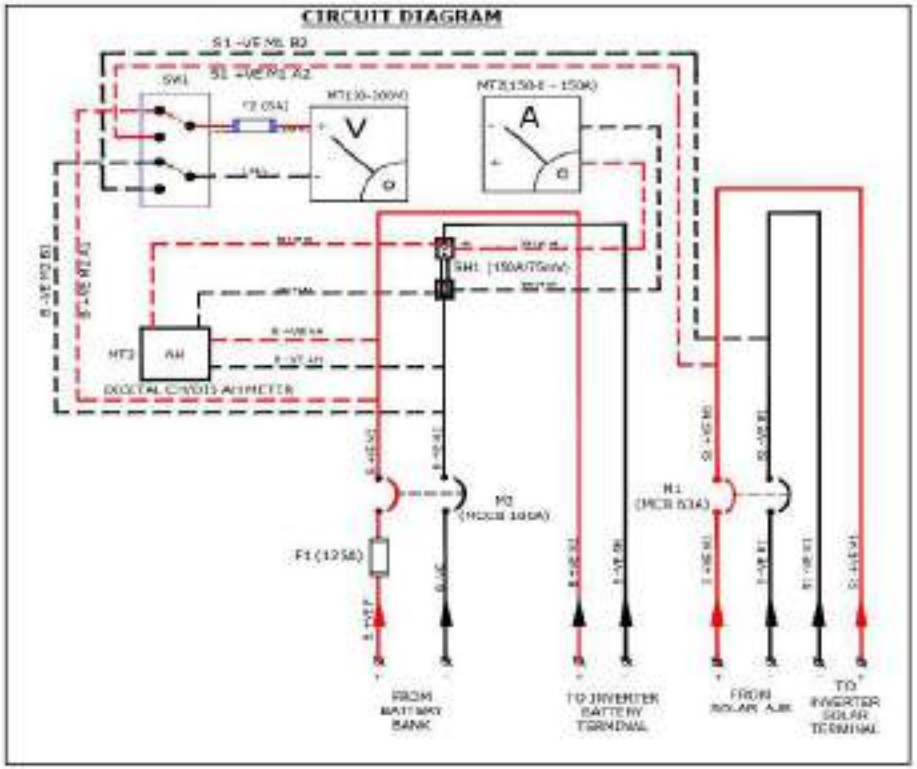

NOTE:

- 3KW SYSTEM VOLTAGE (48V) :40-85VDC
- ——— POWER CABLES
- ——— CONTROL CABLES

BILL OF MATERIALS

SL NO	DWG REF	ITEM DESCRIPTION	QTY	UNIT	MAKE
1	F1	HRC FUSE (FOR 150A DC RATED)	01	No	GEC / HOPASIAN / REPUTED
2	F1	HRC FUSE (FOR 100A DC RATED)	01	No	GEC / HOPASIAN / REPUTED
3	F2	FUSE WIRE 10 A WITH HOLDER	01	No	PHOENIX / REPUTED
4	[illegible]	[illegible]	01	No	[illegible]
5	M1	MCB 63A, 2POLE, DC RATED	01	No	GEC / ABB / SCHNEIDER / REPUTED
6	M2	MCCB 100A, 2POLE, DC RATED	01	No	GEC / ABB / SCHNEIDER / REPUTED
7	SW1	6A CDC ROTARY SWITCH 2POLE 2WAY	01	No	SALZER / TE / PHOENIX / REPUTED
8	SH1	SHUNT 150A/75mV	01	No	[illegible]
9	MT1	DC ANALOG VOLT METER 0-300V, [illegible]	01	No	EIC / PHONIX / REPUTED
10	MT2	DC ANALOG AMMETER METER [illegible]	01	No	EIC / PHONIX / REPUTED
11	MT3	DIGITAL CUMULATIVE CHARGE AH METER OPERATING VOLTAGE 48 - 270 VDC	01	No	EIC / PHONIX / CONTROL / REPUTED
12	SOLAR	CABLE GLAND PG16	04	Nos	JSSD / ACTIVE / REPUTED
13	BATTERY	CABLE GLAND PG 29	04	Nos	JSSD / ACTIVE / REPUTED
14	SOLAR & BATTERY	TERMINAL BLOCKS (STRIP) 100A	08	Nos	PHOENIX / WEIDMUEL / WAGO / REPUTED
15	----	GRADING RESISTOR	01	No	REPUTED
16	SOLAR & BATTERY	LUGS FOR TERMINAL TYPE PIN	01	LOT	JSS / REPUTED
17	---	CABLES COPPER BUSBAR • POWER CABLE BUSBAR • CONTROL CABLE 1.5SQMM	01	LOT	RR / POLYCAB / REPUTED
18	---	2.5 SQMM YELLOW/GREEN COLOUR COPPER CABLE	5.0	MTRS	RR / POLYCAB / REPUTED
19	---	END CLAMPS	01	LOT	PHOENIX / CLMDN / WAGO / REPUTED
20	---	DIN RAIL 0 WAYS, LABELS, MOUNTING ACCESSORIES	01	LOT	REPUTED
21	---	CARTON PACKING BOX	01	NO	REPUTED

ENCLOSURE DETAILS

01	• DIMENSION : [illegible] • THICKNESS : 1.2 MM • COATING SHADE : RAL 7035(SEA GREY) • COATING THICKNESS : 80 MICRONS • CABLING : [illegible] • CABLE ENTRY : BOTTOM • MOUNTING : WALL	REPUTED

LABEL :- 1. DETAIL CIRCUIT DIAGRAM SHALL BE PASTED ON THE LID.
2. DANGER SYMBOL SHALL BE PASTED ON THE ENCLOSURE

DESCRIPTION

THIS SHALL CONSIST OF SUITABLE POWDER COATED METAL CASING. IN THIS BOX A SEPARATE ARRANGEMENT WHICH SHALL CONSIST OF MCCBS OF SUITABLE SPECIFICATIONS & WHICH CAN WITHSTAND RESPECTIVE FLOW OF CURRENT, WITH THE PURPOSE OF PROVIDING THE OPTION FOR ISOLATING THE BATTERY BANK & SPV ARRAYS SHOULD BE MADE. THERE SHALL BE COPPER BUS BARS OF SUITABLE RATING. PROPER RATING HRC FUSE & MCCB/ISOLATOR FOR DC APPLICATION SHOULD BE SUITABLY INSTALLED IN DCDB AS BATTERY BANK ISOLATOR. BEST QUALITY AH METER HAS TO BE INSTALLED TO MEASURE THE CUMULATIVE CHARGING & DISCHARGING STATUS OF BATTERY BANK.

REV	DATE	DESCRIPTION	DRAWN	CHKD	APPD
A	[illegible]	MCB RATING NO CHANGED FROM 100A TO 63A	----	----	----

CHHATTISGARH STATE RENEWABLE ENERGY DEVELOPMENT AGENCY (CREDA)

DCDB-3KW CREDA MODE

DRAWN	CHKD	APPD	SHEET
M.S.S	[illegible]	[illegible]	1 OF 1
DATE 20.06.18	DATE 20.06.18	DATE 20.06.18	REV A

DWG No. F03.02.0039 — A4

REFERENCE DRAWINGS	
DWG. No.	----------

CIRCUIT DIAGRAM

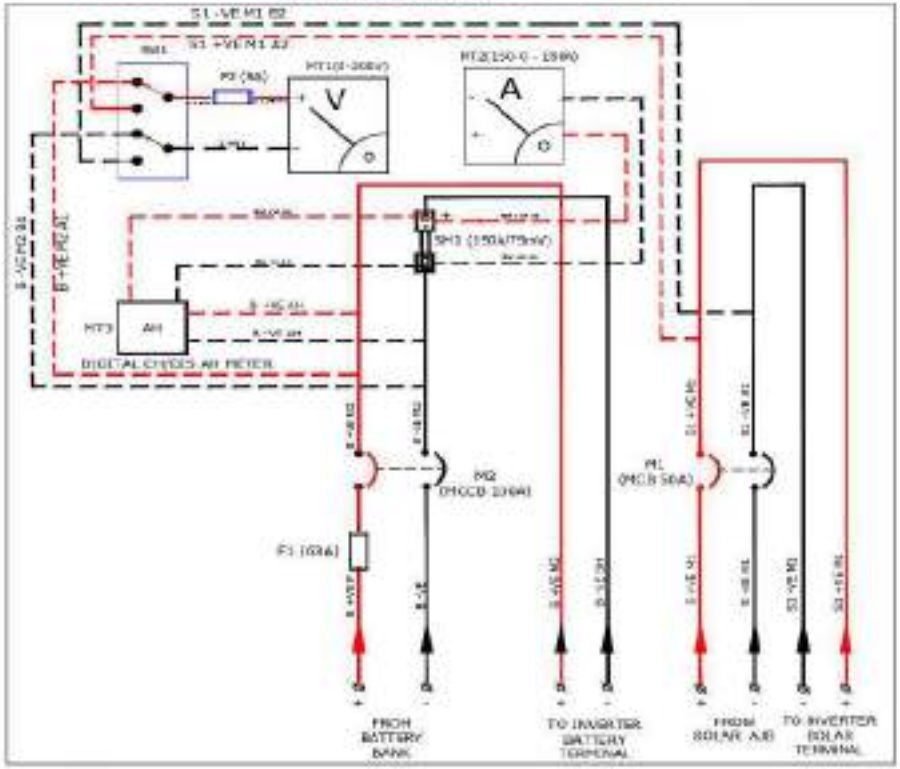

NOTE

- 2KW SYSTEM VOLTAGE (48V) :40-85VDC
- ——— POWER CABLES
- ------- CONTROL CABLES

BILL OF MATERIALS

SL.NO	CKT REF	ITEM DESCRIPTION	QTY	UNIT	MAKE
1	F1	HRC FUSE BASE 160A DC RATED	01	No	EASY ENGINEERING / REPUTED
2	F1	HRC FUSE LINK 63A DC RATED	01	No	EASY ENGINEERING / REPUTED
3	F2	FUSE BASE TBJ WITH END PLATE	03	No	PHOENIX / REPUTED
4	F2	GLASS FUSE LINK 5A DC 250V	01	No	PROTECTRON / REPUTED
5	M1	MCCB 63A 2POLE DC RATED	01	No	C&S / ABB / SIEMENS / REPUTED
6	M2	MCCB 100A 2POLE DC RATED	01	No	C&S / ABB / SIEMENS / REPUTED
7	SW1	16A DC ROTARY SWITCH 2POLE 2WAY	01	No	ALLEN / TELEMECHANIQUE / REPUTED
8	SH1	SHUNT 150A/75mV	01	No	EIC / PRISMS / REPUTED
9	MT1	DC ANALOG VOLTMETER 0-300V, 96X96 X 38mm	01	No	EIC / PRISMS / REPUTED
10	MT2	DC ANALOG AMMETER BATTERY 150-0-150A, 96X96 X 38mm	01	No	EIC / PRISMS / REPUTED
11	MT3	DIGITAL SUMMLATIVE CHDG AH METER OPERATING VOLTAGE 40- 85VDC	01	No	EIC / PRISMS / CONTRON / REPUTED
12	SOLAR	CABLE 16AWG PO 19	04	Nos	JASO / ACTIVE / REPUTED
13	BATTERY	CABLE 16AWG PO 19	04	Nos	JASO / ACTIVE / REPUTED
14	SOLAR & BATTERY	TERMINAL BLOCKS (STRIP) 150A	08	Nos	PHOENIX / ELMEX / WAGO / REPUTED
15	---	MICRONI ISOLATOR	01	No	REPUTED
16	SOLAR & BATTERY	LUGS FOR INTERNAL WIRING	01	LOT	SS / REPUTED
17	---	CABLES (COPPER BUSBAR) • POWER CABLE 16AWG • CONTROL CABLE 1.5SQMM	01	LOT	RR / POLYCAB / REPUTED
18	---	2.5 SQMM YWL (YAMAMURA COLOR COPPER CABLE	0.2	KMTRS	RR / POLYCAB / REPUTED
19	---	END CLAMPS	01	LOT	PHOENIX / ELMEX / WAGO / REPUTED
20	---	DIN RAIL CHANNEL, CABLES, MOUNTING ACCESSORIES	01	LOT	REPUTED
21	---	ONETON PADLOCKS	01	NO	REPUTED

ENCLOSURE DETAILS

01	• DIMENSION : 400 X 300 X 170 MM (TYPICAL) • THICKNESS : 1.2 MM • COATING SHADE : RAL 7035(LIGHT GREY) • COATING THICKNESS : 80 MICRONS • PAINTING : POWDER COATING • CABLE ENTRY : BOTTOM • MOUNTING : WALL	REPUTED

LABEL :- 1. DETAIL CIRCUIT DIAGRAM SHALL BE PASTED ON THE LID
2. DANGER SYMBOL SHALL BE PASTED ON THE ENCLOSURE

DESCRIPTION

THIS SHALL CONSIST OF SUITABLE POWDER COATED METAL CASING. IN THIS BOX A SEPARATE ARRANGEMENT WHICH SHALL CONSIST OF MCCBS OF SUITABLE SPECIFICATIONS & WHICH CAN WITHSTAND RESPECTIVE FLOW OF CURRENT, WITH THE PURPOSE OF PROVIDING THE OPTION FOR ISOLATING THE BATTERY BANK & SPV ARRAYS SHOULD BE MADE. THERE SHALL BE COPPER BUS BARS OF SUITABLE RATING. PROPER RATING HRC FUSE & MCCB/ISOLATOR FOR DC APPLICATION SHOULD BE SUITABLY INSTALLED IN DCDB AS BATTERY BANK ISOLATOR. BEST QUALITY AH METER HAS TO BE INSTALLED TO MEASURE THE CUMULATIVE CHARGING & DISCHARGING STATUS OF BATTERY BANK.

REV.	DATE	DESCRIPTION	DRAWN	CHKD.	APPR.

CHHATTISGARH STATE RENEWABLE ENERGY DEVELOPMENT AGENCY (CREDA)

DCDB 2KW CREDA MODE

DRAWN	CHKD.	APPR.	SHEET
			1 OF 1
DATE	DATE	DATE	REV.

DWG No. F03.02.0003 — A4

REFERENCE DRAWINGS	
DWG No.	F03.02.0038

CIRCUIT DIAGRAM

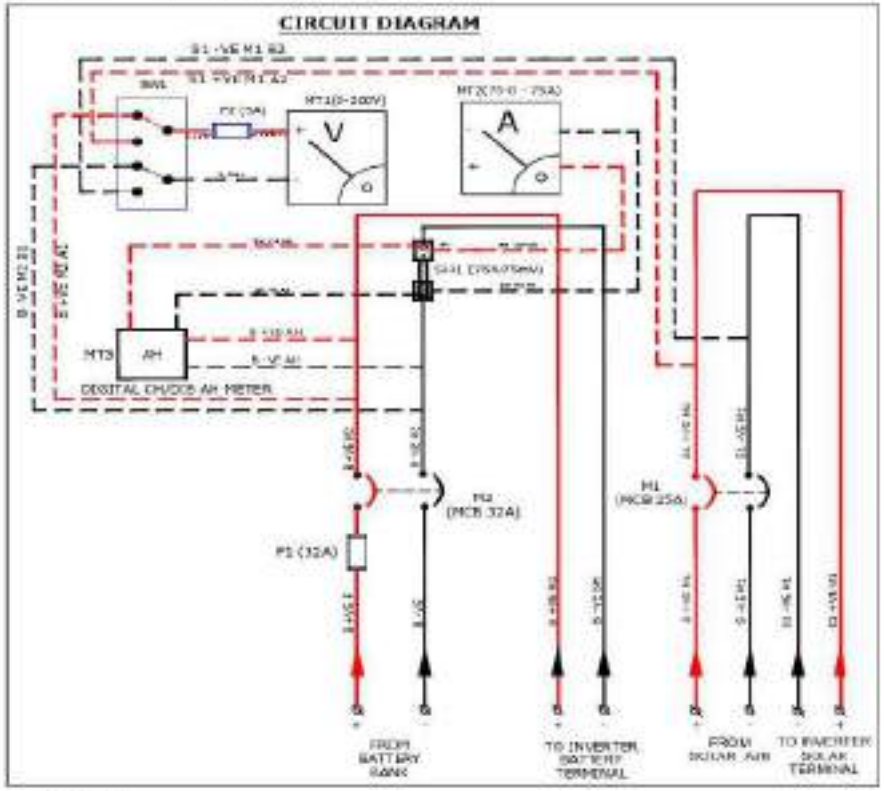

NOTE:

- 1KW SYSTEM VOLTAGE (48V) :46-65VDC
- —— POWER CABLES
- —— CONTROL CABLES

BILL OF MATERIALS

SL.NO	CKT REF	ITEM DESCRIPTION	QTY	UNIT	MAKE
1	F1	HRC FUSE BASE 32A AC RATED	01	No	[illegible]
2	F1	HRC FUSE LINK 32A AC RATED	01	No	[illegible]
3	F2	FUSE BASE [illegible]	02	No	PHOENIX / REPUTED
4	F2	GLASS FUSE [illegible]	04	No	PROTECTION / REPUTED
5	M1	MCB 25A, SPOLE, AC RATED	01	No	[illegible]
6	M2	MCB 32A, SPOLE, AC RATED	01	No	[illegible]
7	SW1	[illegible]	01	No	[illegible]
8	SH1	SHUNT 75A/75mV	01	No	[illegible]
9	MT1	DC ANALOG VOLT METER [illegible]	01	No	[illegible]
10	MT2	DC ANALOG AMMETER VICTER 75-0-75A, SIZE [illegible]	01	No	[illegible]
11	MT3	DIGITAL CUMULATIVE CHUDOS AH METER OPERATING VOLTAGE 46-65VDC	01	No	[illegible]
12	SOLAR	CABLE [illegible]	04	[illegible]	[illegible]
13	BATTERY	CABLE [illegible]	02	[illegible]	[illegible]
14	SOLAR & BATTERY	TERMINAL BLOCKS [illegible]	08	[illegible]	[illegible]
15	- - -	[illegible]	09	No	REPUTED
16	SOLAR & BATTERY	LUGS FOR INTERNAL WIRING	01	LOT	[illegible]
17	- - -	CABLES /COPPER BUS BAR • POWER CABLE [illegible] • CONTROL CABLE [illegible]	01	LOT	[illegible]
18	- - -	2.5MM YELLOW/RED COLOR COPPER CABLE	02	MTR	[illegible]
19	- - -	[illegible]	01	LOT	[illegible]
20	- - -	DRYTAL, SHUNTS, LABELS, MOUNTING ACCESSORIES	01	LOT	REPUTED
21	- - -	CARTON PACKING BOX	01	NO	REPUTED

ENCLOSURE DETAILS

01	• DIMENSION : [illegible] • THICKNESS : 1.2 MM • COATING SHADE : RAL [illegible] • COATING THICKNESS : [illegible] • FINISHING : POWER COATING • CABLE ENTRY : BOTTOM • MOUNTING : WALL	REPUTED

LABEL :- 1. DETAIL CIRCUIT DIAGRAM SHALL BE PASTED ON THE LID
2. DANGER SYMBOL SHALL BE PASTED ON THE ENCLOSURE

DESCRIPTION

THIS SHALL CONSIST OF SUITABLE POWDER COATED METAL CASING. IN THIS BOX A SEPARATE ARRANGEMENT WHICH SHALL CONSIST OF NECESS. OF SUITABLE SPECIFICATIONS & WHICH CAN WITHSTAND RESPECTIVE FLOW OF CURRENT, WITH THE PURPOSE OF PROVIDING THE OPTION FOR ISOLATING THE BATTERY BANK & SPV ARRAYS SHOULD BE MADE. THERE SHALL BE COPPER BUS BARS OF SUITABLE RATING. PROPER RATING HRC FUSE & MCCB ISOLATOR FOR DC APPLICATION SHOULD BE SUITABLY INSTALLED IN DCDB AS BATTERY BANK ISOLATOR. BEST QUALITY AH METER HAS TO BE INSTALLED TO MEASURE THE CUMULATIVE CHARGING & DISCHARGING STATUS OF BATTERY BANK.

REV.	DATE	DESCRIPTION	DRAWN	CHKD.	APPD.

CHHATTISGARH STATE RENEWABLE ENERGY DEVELOPMENT AGENCY (CREDA)

DCDB 1KW- CREDA

DRAWN	CHKD.	APPD.	SHEET
[illegible]	VIK	[illegible]	1 OF 1
DATE [illegible]	DATE [illegible]	DATE [illegible]	REV.0

DWG No. F03.02.0073 — A4

REFERENCE DRAWINGS	
DWG No.	**********

CIRCUIT DIAGRAM

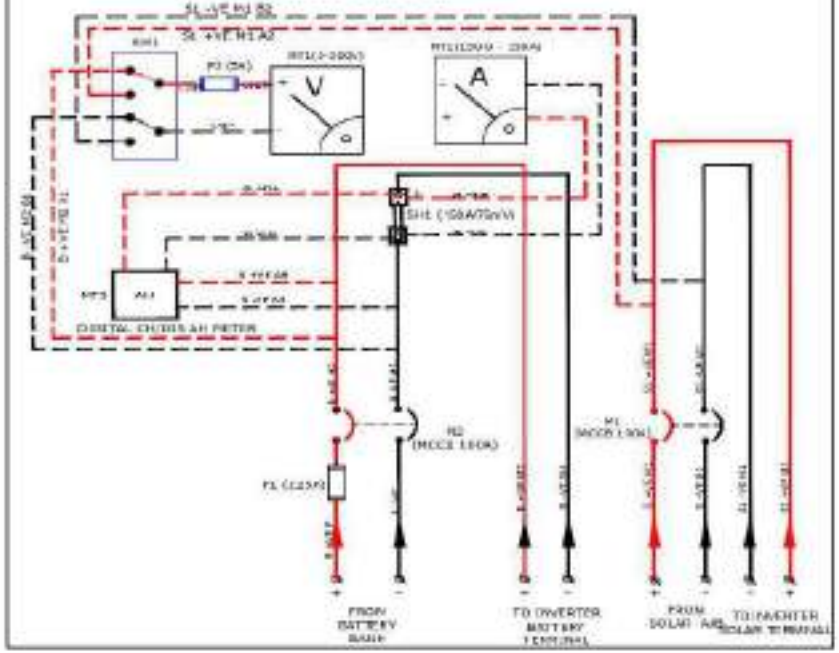

NOTE:

- 10 KW SYSTEM VOLTAGE (120V) : 100-200VDC
- ——— POWER CABLES
- ——— CONTROL CABLES

BILL OF MATERIALS

SLNO	CKT REF	ITEM DESCRIPTION	QTY.	UNIT	MAKE
1	F1	HRC FUSE BASE 100A, DC RATED	01	No.	GEE / INDOSAW / REPUTED
2	F1	HRC FUSE 125A / 1000V DC RATED	01	No.	GEE / INDOSAW / REPUTED
3	F2	FUSEWIRE 16A WITH END PLATE	01	No.	PHOENIX / REPUTED
4	F2	GLASS FUSE NA 5A, 5X20MM	01	No.	PROTECTRON / REPUTED
5	MB	MCB 16A, 1/POLE, DC RATED	01	No.	GEE / ABB / SCHNEIDER / REPUTED
6	MB	MCB 10A, 2/POLE, DC RATED	01	No.	GEE / ABB / SCHNEIDER / REPUTED
7	SW1	65 DC ROTARY SWITCH, POS 2WAY	01	No.	SOLIMA / TELEMECH / REPUTED
8	SH1	SHUNT 150A/75mV	01	No.	EIC / REMAB / REPUTED
9	MT1	DC ANALOG VOLTMETER 0-300V, 0.02.08 X 96mm	01	No.	EIC / REMAB / REPUTED
10	MT2	DC ANALOG AMMETER METER 0-50A, 0.02.08 X 96mm	01	No.	EIC / REMAB / REPUTED
11	MT3	DIGITAL CUMULATIVE CR/DIS AH METER [illegible]	01	No.	CIE / RIGAG / COUNTRON / REPUTED
12	SOLAR	CABLE 2X4NE PO10	01	Mtrs	JASO / ACTIVE / REPUTED
13	BATTERY	CABLE 2X4NE PO 10	04	Mtrs	JASO / ACTIVE / REPUTED
14	SOLAR & BATTERY	TERMINAL BLOCKS (DRN) 16A	01	Nos	PHOENIX / ELMEX / WAGO / REPUTED
15	SOLAR & BATTERY	TERMINAL BLOCKS (DRN) 16A	04	Nos	PHOENIX / ELMEX / WAGO / REPUTED
16	---	MECHANICAL INTERLOCK	01	No.	REPUTED
17	SOLAR & BATTERY	LUGS FOR INTERNAL WIRING	03	LOT	[illegible] / REPUTED
18	---	CABLE / COPPER BUS BAR • POWER CABLE 35SQMM • CONTROL CABLE 1.5SQMM	01	LOT	[illegible] / POLICAB / REPUTED
19	---	2.5 SQMM YELLOW/GREEN COLOUR EARTHING CABLE	[illegible]	Mtrs	[illegible] / POLICAB / REPUTED
20	---	MAG CLAMPS	01	LOT	PHOENIX / ELMEX / WAGO / REPUTED
21	---	WIRE DUCT ON RAIL CHANNEL, LABELS, MOUNTING ACCESSORIES	01	LOT	REPUTED
22	---	PACKING BOX	01	NO	REPUTED

ENCLOSURE DETAILS

01	• [illegible] • [illegible] • [illegible] • [illegible] • [illegible] • [illegible] • [illegible]	SENTEC

LABEL - [illegible]

DESCRIPTION

THIS SHALL CONSIST OF SUITABLE POWDER COATED METAL CASING. IN THIS BOX A SEPARATE ARRANGEMENT WHICH SHALL CONSIST OF MCCBS OF SUITABLE SPECIFICATIONS & WHICH CAN WITHSTAND RESPECTIVE FLOW OF CURRENT, WITH THE PURPOSE OF PROVIDING THE OPTION FOR ISOLATING THE BATTERY BANK & SPV ARRAYS SHOULD BE MADE. THERE SHALL BE COPPER BUS BARS OF SUITABLE RATING. PROPER RATING HRC FUSE & MCCB/ISOLATOR FOR DC APPLICATION SHOULD BE SUITABLY INSTALLED IN DCDB AS BATTERY BANK ISOLATOR. BESIDE DIGITAL AH METER HAS TO BE INSTALLED TO MEASURE THE CUMULATIVE CHARGING & DISCHARGING STATUS OF BATTERY BANK.

REV.	DATE	DESCRIPTION	DRAWN	CHKD.	APPR.
---	---	---	---	---	---

CHHATTISGARH STATE RENEWABLE ENERGY DEVELOPMENT AGENCY (CREDA)

DCDB 10KW CREDA

DRAWN	CHKD.	APPR.	SHEET
M.K.A	[illegible]	[illegible]	1 OF 1
DATE 10.06.21	DATE 10.06.21	DATE 10.06.21	REV. 0

DWG No. F03.02.008 — SHEET SIZE A4

REFERENCE DRAWINGS

DWG No. ------

BILL OF MATERIAL 6 INPUT / 1 OUTPUT WITH SPD

SL NO	ITEM DESCRIPTION	QTY	UNIT	MAKE
1	ABS/PC Enclosure 380x280x130mm	01	No	Tribox / Fibox
2	Diode PCB Board 1000V DC, 20 A Reverse Blocking Diode With Necessary Busbar Arrangement	01	No	Reputed
3	SPD 1000VDC Type 2, Arresting Capacity To 40kA	01	No	Phoenix /Reputed
4	Terminal Block UK16	02	Nos.	Phoenix/Salzer/Reputed
5	Terminal Block UK6	01	No	Phoenix/Salzer/Reputed
6	End Plate UK4-10	01	No	Phoenix/Salzer/Reputed
7	End Stopper	03	Nos	Phoenix/Salzer/Reputed
8	Cable gland PG16	06	Nos	Jigo / Active / Reputed
9	Cable gland IP65 PG9	01	No	Jigo / Active / Reputed
10	Cable gland IP65 PG16	02	Nos	Jigo / Active / Reputed
11	Hylam Sheet 3mm Thk	01	No	Reputed
12	Spacers 4X35mm	04	Nos	Reputed
13	Product Labels And Identification	01	Lot	Reputed
14	Lugs for Internal Wiring	01	Lot	Reputed
15	Cable 16Sqmm Red & Black	01	Lot	Polycab/RR
16	4 Sqmm Copper Red And Black Cable	01	Lot	Polycab/RR
17	4 Sqmm Yellow/Green Color Earthing Cable	01	Lot	Polycab/RR
18	Carton Packing Box	01	No	Reputed

MOUNTING ACCESSORIES

SLNO	DESCRIPTION	QTY	UNIT	MAKE
1	CHEESE HEAD M6X45mm WITH PLAIN,SPRING WASHER AND NUT	04	Nos	REPUTED
2	4 SQMM EARTHING CABLE CRIMPING WITH 4 PIN AND 4 E 8 RING LUGS	1	MTRS	REPUTED

REV.	DATE	DESCRIPTION	DRAWN	CHKD.	APPR.

CHHATTISGARH STATE RENEWABLE ENERGY DEVELOPMENT AGENCY (CREDA)

AJB 6 INPUT AND 1 OUTPUT WITH SPD

DRAWN	CHKD.	APPR.	SHEET
M.S.S	VIK	RSN	
DATE 27.06.19	DATE 27.06.19	DATE 27.06.19	REV 2

DWG No. F03.03.0231 — SHEET SIZE A4

REFERENCE DRAWINGS	
DWG No.	------

AJB 6 INPUT 1 OUTPUT WITH SPD

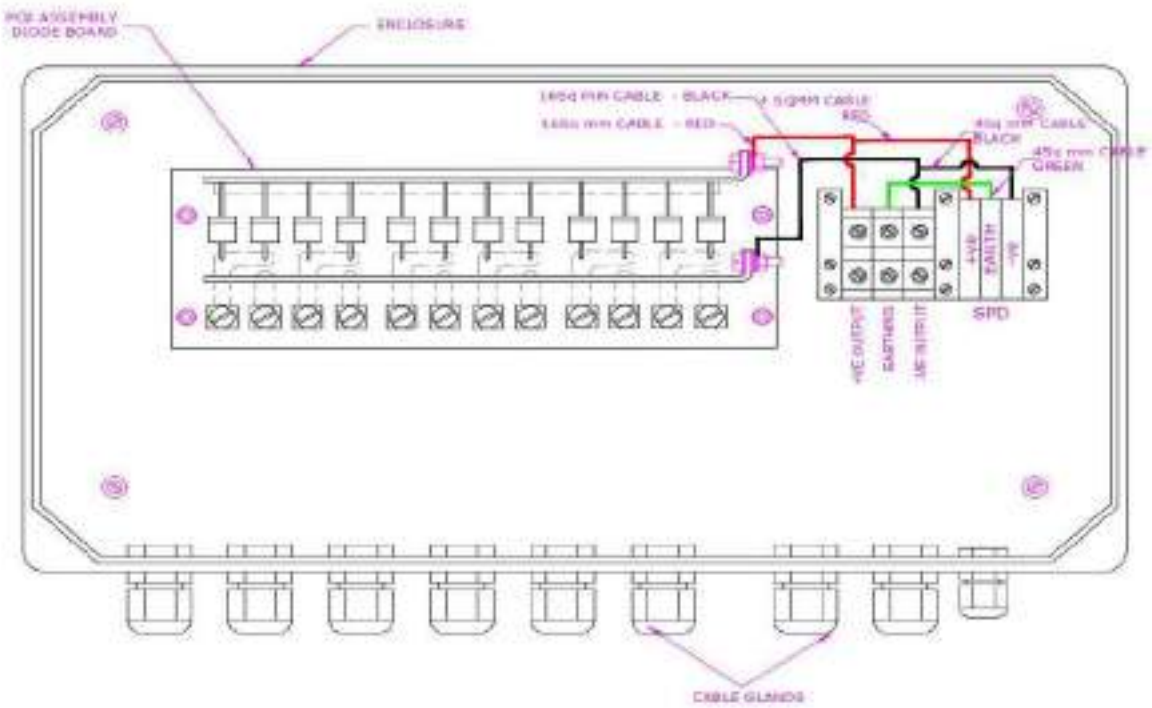

REV	DATE	DESCRIPTION	DRAWN	CHKD_1	APPR.

CHHATTISGARH STATE RENEWABLE ENERGY DEVELOPMENT AGENCY (CREDA)

AJB 6 INPUT AND 1 OUTPUT WITH SPD

DRAWN	CHKD	APPR.	SHEET
MSS	VIK	RSW	
DATE 27.06.19	DATE 27.06.19	DATE 27.06.19	REV.0
DWG No. F03.03.0231			SHEET SIZE A4

REFERENCE DRAWINGS	
DWG No.	GSR0526

BILL OF MATERIAL 4 INPUT / 1 OUTPUT WITH SPD

SL NO	ITEM DESCRIPTION	QTY	UNIT	MAKE
1	ABS ENCLOSURE WITH TRANSPARENT LID 280X190X130MM	01	NO	TRINITY/FIBOX/REPUTED
2	DIODE PCB BOARD 1000V DC, 20 A REVERSE BLOCKING DIODE WITH NECASSARY BUSBAR ARRANGEMENT	01	NO	REPUTED
3	TERMINAL BLOCK TB10	02	NOS	PHOENIX/REPUTED
4	TERMINAL BLOCK TB6	01	NO	PHOENIX/REPUTED
5	END PLATE	01	NO	PHOENIX/REPUTED
6	END STOPPER	03	NOS	PHOENIX/REPUTED
7	CABLE GLAND PG16	04	NOS	JIGGY ACTIVE/REPUTED
8	CABLE GLAND PG9	01	NO	JIGGY ACTIVE/REPUTED
9	CABLE GLAND PG 16	02	NOS	JIGGY ACTIVE/REPUTED
10	SPD,1000V DC,TYPE II,40kA	01	NO	PHOENIX/REPUTED
11	LUGS FOR INTERNAL WIRING	01	LOT	REPUTED
12	10 SQMM RED & BLACK COLOR CABLE	01	LOT	POLYCAB/RR/REPUTED
13	4 SQMM RED & BLACK COLOR CABLE	01	LOT	POLYCAB/RR/REPUTED
14	4 SQMM YELLOW/GREEN COLOR COPPER CABLE	01	LOT	POLYCAB/RR/REPUTED
15	HYLAM SHEET 3MM THK	01	NO	REPUTED
16	SPACERS 4X20MM	04	NOS	REPUTED
17	MOUNTING HARDWARES AND ACCESSORIES	01	LOT	REPUTED
18	CARTON PACKING BOX	01	NO	REPUTED

MOUNTING ACCESSORIES

SL NO	DESCRIPTION	QTY	UNIT	MAKE
1	CHEESE HEAD M6X45mm WITH PLAIN & SPRING WASHER AND NUT SS304	04	NOS	REPUTED
2	450MM EARTHING YELLOW/GREEN CABLE CRIMPING WITH4PIN &4 E6 RING LUGES	0.5	MTRS	REPUTED

REV	DATE	DESCRIPTION	DRAWN	CHCK_1	APPR.

CHHATTISGARH STATE RENEWABLE ENERGY DEVELOPMENT AGENCY (CREDA)

AJB 4 INPUT AND 1 OUTPUT WITH SPD

DRAWN	CHKD	APPR.	SHEET
M.S.S	RK	RSW	3 OF 3
DATE 22.02.16	DATE 22.02.16	DATE 22.02.16	REV. 0
DWG No. GSR-0526			SHEET SIZE A4

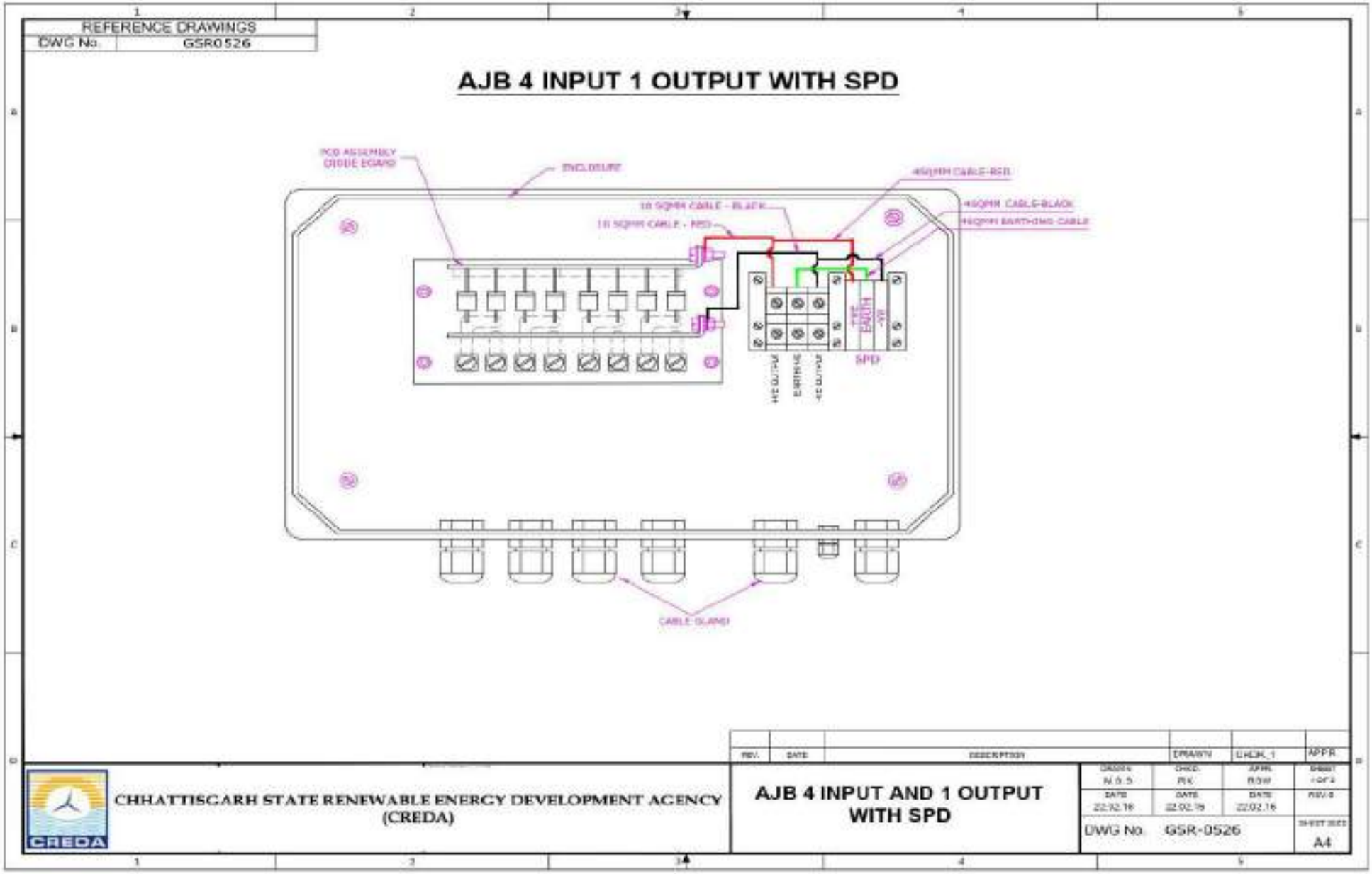
REFERENCE DRAWINGS
DWG No. GSR0526
AJB 4 INPUT 1 OUTPUT WITH SPD
PCB ASSEMBLY DIODE BOARD
ENCLOSURE
10 SQMM CABLE - BLACK
10 SQMM CABLE - RED
4SQMM CABLE-RED
4SQMM CABLE-BLACK
4SQMM EARTHING CABLE
SPD
CABLE GLAND
CHHATTISGARH STATE RENEWABLE ENERGY DEVELOPMENT AGENCY (CREDA)
CREDA
AJB 4 INPUT AND 1 OUTPUT WITH SPD
DWG No. GSR-0526
A4

REFERENCE DRAWINGS	
DWG No.	GSR0530

MJB 2 INPUT 1 OUTPUT

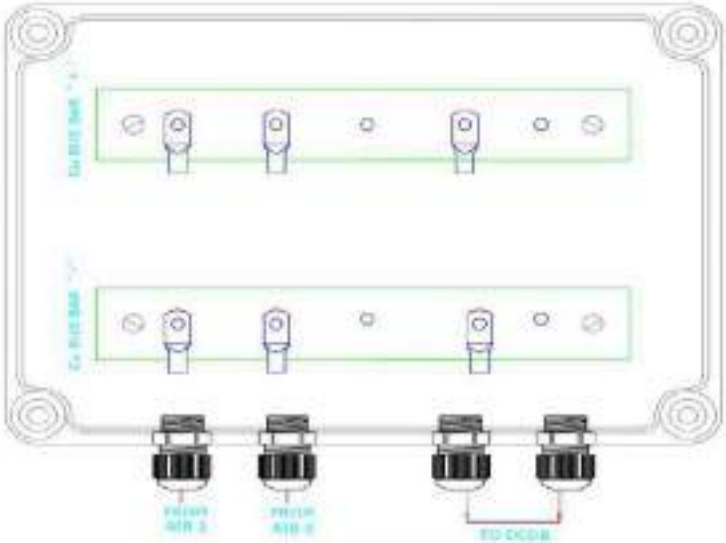

FRONT VIEW

SIDE VIEW

BILL OF MATERIALS

SL.NO	ITEM DESCRIPTION	QTY	UNIT	MAKE
1	ABS/PC FRG1 GRLRF 240x160x130MM	01	NO	FREDX/TRIBOX
2	TINNED COPPER BUSBAR 30X4.5x5MM	02	NOS	REPUTED
3	M6X30MM INSULATORS	02	NOS	REPUTED
4	M6X40MM INSULATORS	03	NOS	REPUTED
5	IP65 CABLE GLANDS PG25	04	NOS	JACOB/ ACTIVE/REPUTED
6	RING LUGS 16SQMM 16	04	NOS	REPUTED
7	RING LUGS 35SQMM 16	02	NOS	REPUTED
8	HYLAM SHEET 3MM THICK	01	NO	LAMTUF/REPUTED
9	MOUNTING FASTNERS	01	LOT	REPUTED
10	LABELS	01	LOT	REPUTED
11	PACKING BOX	01	NO	REPUTED

MOUNTING ACCESSORIES

SL.NO	DESCRIPTION	QTY	UNIT	MAKE
1	CHEESE HEAD M6x45mm WITH PLAIN WASHER,SPRING WASHER AND NUT SS304	04	Nos.	REPUTED

REV	DATE	DESCRIPTION	DRAWN	CHKD	APPR

CHHATTISGARH STATE RENEWABLE ENERGY DEVELOPMENT AGENCY (CREDA)

MJB 2 INPUT 1 OUTPUT

DRAWN	CHKD	APPR.	SHEET 1 OF 1
M.K.R.	VK	RSW	REV.
DATE 12.06.15	DATE 12.06.15	DATE 12.06.15	
DWG No. GSR0530			SHEET SIZE A4

REFERENCE DRAWINGS	
DWG No.	----------

CIRCUIT DIAGRAM

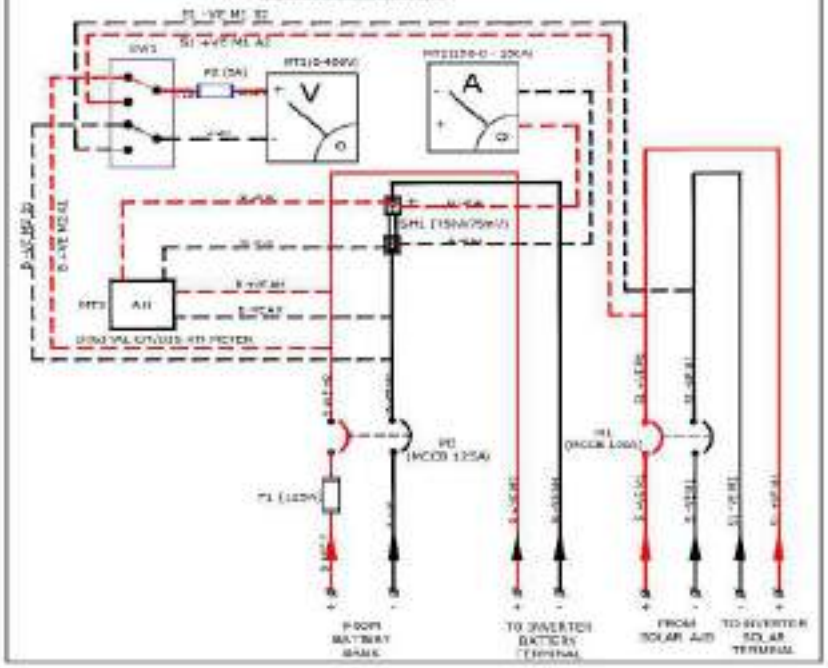

NOTE:

- 15 KW SYSTEM VOLTAGE (240V) 200-400VDC
- —— POWER CABLES
- —— CONTROL CABLES

BILL OF MATERIALS

SL.NO	CKT REF	ITEM DESCRIPTION	QTY	UNIT	MAKE
1	F1	HRC FUSE BASE 160A,DD RATED	01	No	CEG / INDOWEAR / REPUTED
2	F1	[illegible]	01	No	CEG / INDOWEAR / REPUTED
3	F2	FUSE BASE 75A4 WITH END PLATE	01	No	PHOENIX / REPUTED
4	F2	[illegible]	01	No	PROTECTRON / REPUTED
5	VS	VCB 125A, 2POLE DC RATED	01	No	CEG / ABB / SCHNEIDER / REPUTED
6	VS	RCCB 100A,2POLE, DC RATED	01	No	CEG / ABB / SCHNEIDER / REPUTED
7	RSW	BLOCK ROTARY SWITCH,2 POLE,2WAY	01	No	KALZER / TELEMECA / REPUTED
8	SH	SHUNT 150A75mV	01	No	CKI / PRAHAD / REPUTED
9	VM1	DC ANALOG VOLTMETER 0-400V, [illegible]	01	No	CKI / PRAHAD / REPUTED
10	VM2	DC ANALOG AMMETER [illegible]	01	No	CKI / PRAHAD / REPUTED
11	MT1	DIGITAL CUMULATIVE CHRGS AH METER OPERATING VOLTAGE 200- 400VDC	01	No	[illegible] / CONTROL / REPUTED
12	SOLAR	CABLE 01 MM FR FR	04	Nos	ARID / ACTIVE / REPUTED
13	BATTERY	CABLE 01 MM FR FR	04	Nos	ARID / ACTIVE / REPUTED
14	SOLAR & BATTERY	TERMINAL BLOCKS (DPSB) 1100	04	Nos	PHOENIX / CLMOX / WAGO / REPUTED
15	SOLAR & BATTERY	TERMINAL BLOCKS (DPSB) 1100	04	Nos	PHOENIX / CLMOX / WAGO / REPUTED
16	---	[illegible]	01	No	REPUTED
17	SOLAR & BATTERY	[illegible]	01	LOT	ID / REPUTED
18	---	CABLES / COPPER LUG BAR 1 POWER CABLE 2500MM 1 CONTROL CABLE 1.5MM	01	LOT	RR / POLYCAB / REPUTED
19	---	[illegible]	0.2	Mtrs	[illegible] / POLYCAB / REPUTED
20	---	END CLAMPS	01	LOT	PHOENIX / CLMOX / WAGO / REPUTED
21	---	WIRE DUCT, DIN RAIL CHANNEL, CABLE MOUNTING [illegible]	01	LOT	REPUTED
22	---	PRINTING BOX	01	NO.	REPUTED

ENCLOSURE DETAILS

01	• [illegible] • [illegible] • [illegible] • [illegible] • [illegible] • [illegible] • [illegible]	REPUTED

NOTE: [illegible]

DESCRIPTION

THIS SHALL CONSIST OF SUITABLE POWDER COATED METAL CASING. IN THIS BOX A SEPARATE ARRANGEMENT WHICH SHALL CONSIST OF MCCB'S OF SUITABLE SPECIFICATIONS & WHICH CAN WITHSTAND RESPECTIVE FLOW OF CURRENT, WITH THE PURPOSE OF PROVIDING THE OPTION FOR ISOLATING THE BATTERY BANK & SPV ARRAYS SHOULD BE MADE. THERE SHALL BE COPPER BUS BARS OF SUITABLE RATING. PROPER RATING HRC FUSE & MCCB ISOLATOR FOR DC APPLICATION SHOULD BE SUITABLY INSTALLED IN DCDB AS BATTERY BANK ISOLATOR. BEST QUALITY AH METER HAS TO BE INSTALLED TO MEASURE THE CUMULATIVE CHARGING & DISCHARGING STATUS OF BATTERY BANK.

REV.	DATE	DESCRIPTION	DRAWN	CHKD.	APPR.
---	---	----------	---------	------	------

CHHATTISGARH STATE RENEWABLE ENERGY DEVELOPMENT AGENCY (CREDA)

DCDB 15KW

DRAWN	CHKD.	APPR.	SHEET
[illegible]	[illegible]	[illegible]	1 OF 1
DATE 10.08.21	DATE 10.08.21	DATE 10.08.21	REV.0
DWG No. F03.02.0044			SHEET SIZE A4

REFERENCE DRAWINGS	
DWG No.	--------

CIRCUIT DIAGRAM

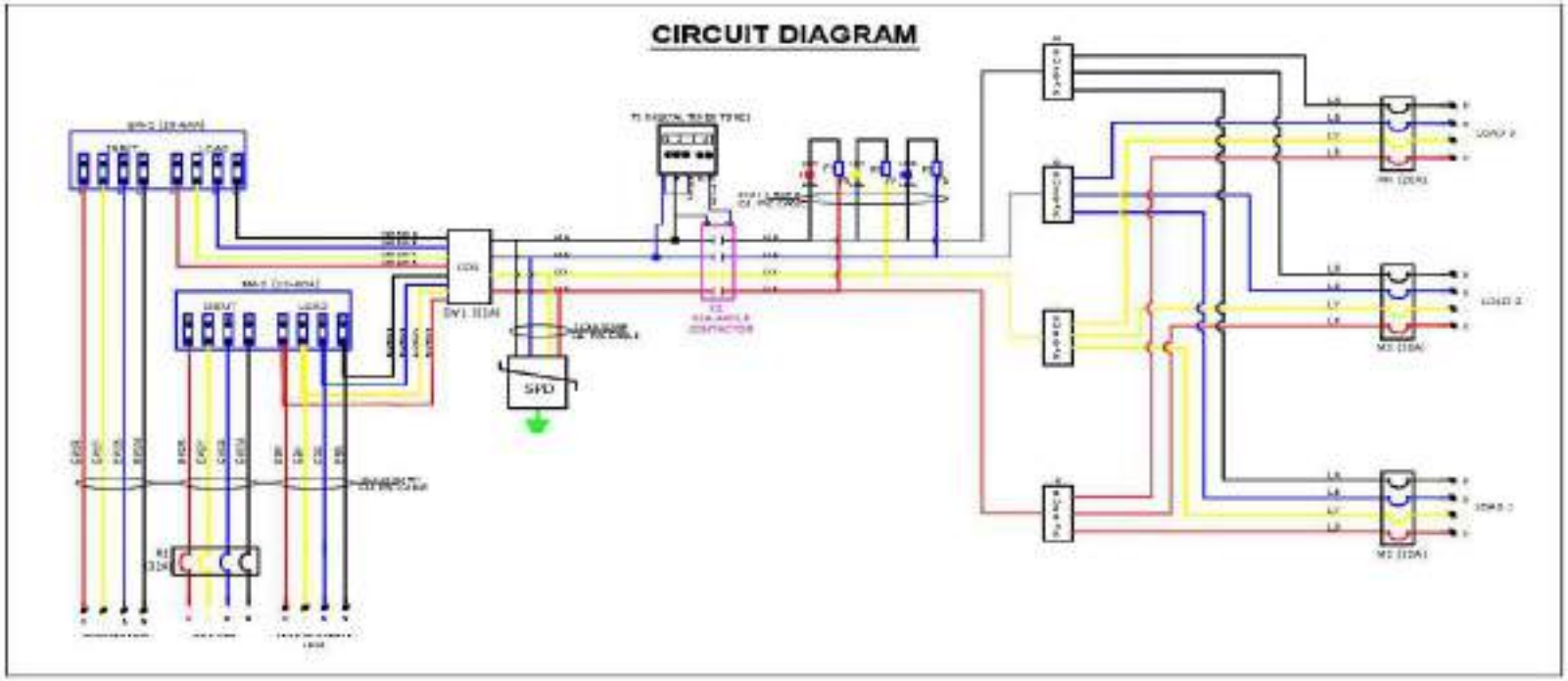

LABEL : - 1. DETAIL CIRCUIT DIAGRAM SHALL BE PASTED ON THE LID
2. DANGER SYMBOL SHALL BE PASTED ON THE ENCLOSURE

DESCRIPTION

THIS SHALL CONSIST OF BOX OF SUITABLE FOWDER COATED METAL CASING. ONE FEEDER PER PHASE SHALL BE PROVIDED IN ACDB WITH MCB OF SUITABLE CAPACITY INSTALLED AT EACH FEEDER IN THE ACDB. ONE ELECTRONIC ENERGY METER, OF MAKE, SINGLE / THREE PHASE, OF GOOD QUALITY SHALL ALSO BE INSTALLED IN ACDB SUITABLE PLACED TO MEASURE THE CONSUMPTION OF POWER FROM SPV POWER PLANT. PROPER RATING MCB SHALL BE INSTALLED AT EVERY FEEDER IN CASE OF SINGLE PHASE OUTPUT ALSO. THERE SHALL BE THREE FEEDERS TO PROTECT FEEDERS FROM THE SHORT CIRCUIT CURRENT AS PER THE REQUIREMENT OF THE SITE & INSTRUCTIONS OF CREDA. A SEPARATE DEDICATED FEEDER FROM CONVENTIONAL/GRID LINE TO POLE AS WELL AS ACDB SHOULD ALSO BE INSTALLED, IF REQUIRED AS PER CREDA'S INSTRUCTION. A SEPARATE CHANGE OVER SWITCH OF PROPER RATING SHOULD ALSO BE SUITABLY INSTALLED IN THE ACDB TO ISOLATE THE EXISTING CONNECTED LOAD FROM THE SOLAR SYSTEM & CATER THE POWER TO THE EXISTING LOAD FROM CONVENTIONAL POWER GRIDS. IN CASE OF EMERGENCY. ACDB SHOULD BE CONNECTED BETWEEN POLE & LOAD. SEPARATE ELECTRONIC ENERGY METERS SHOULD BE INSTALLED FOR INCOMING AND OUTGOING CIRCUITS OF ACDB FOR SPVPPS OF CAPACITY MORE THAN 1 MWP.

REV.	DATE	DESCRIPTION	DRAWN	CHKD.	APPR.

CHHATTISGARH STATE RENEWABLE ENERGY DEVELOPMENT AGENCY (CREDA)

ACDB 20KW WITH DUAL ENERGY METER, TIMER & 3 FEEDERS

DRAWN	CHKD.	APPR.	SHEET
DATE	DATE	DATE	REV.
DWG No. F03.01.0679			SHEET SIZE A4

REFERENCE DRAWINGS

DWG No.

CIRCUIT DIAGRAM

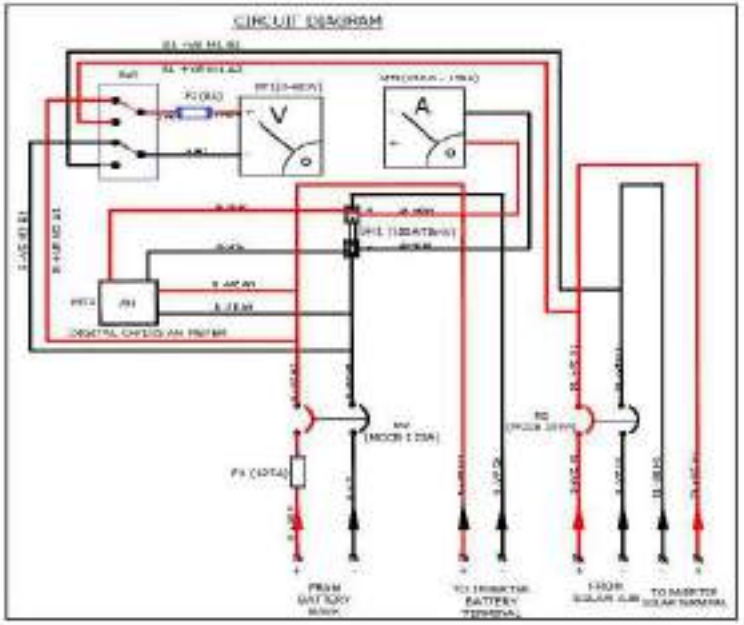

NOTE

- 20 KW SYSTEM VOLTAGE (240V) 200-400VDC
- —— POWER CABLES
- ---- CONTROL CABLES

SLNO	CKT REF	ITEM DESCRIPTION	QTY	UNIT	MAKE
1	F1	HRC FUSE BASE 100A 3P RATED	02	No	GEE / INDIGRAM / REPUTED
2	F1	HRC FUSE LINK 100A 3P RATED	06	No	GEE / INDIGRAM / REPUTED
3	F2	FUSE BASE 10A WITH END PLATE	02	No	PHOENIX / REPUTED
4	F2	GLASS FUSE 5X 20 5X20MM	02	No	PROTECTION / REPUTED
5	MC	MCB 10A 2POLE DC RATED	01	No	[illegible]
6	MC	MCCB 100A 2POLE DC RATED	01	No	GEE / ABB / SIEMENS / REPUTED
7	SW1	SW COD ROTARY SW FOR 2 POLE/WAY	01	No	SALZER, TOLEDOM / REPUTED
8	SH1	SHUNT 100A/50mV	01	No	EIC / INDIGRAM / REPUTED
9	MT1	DC ANALOG VOLT METER 0-400V SIZE 96 X 96mm	01	No	EIC / INDIGRAM / REPUTED
10	MT2	DC MULTI CHANNEL METER 10-0-10A, SIZE 96 X 96mm	01	No	EIC / INDIGRAM / REPUTED
11	MT3	DIGITAL SIGNALATING TILTED AS METER OPERATING VOLTAGE 230~440VAC	01	No	EIC / INDIGRAM / [illegible]
12	SOLAR	CABLE SUPPLY	01	Nos	[illegible] / REPUTED
13	BATTERY	CABLE SUPPLY PS-15	01	Nos	[illegible] / REPUTED
14	SOLAR & BATTERY	TERMINAL BLOCKS 12PIN/10MM	01	Nos	PHOENIX / ELMEX / WAGO / REPUTED
15	SOLAR & BATTERY	TERMINAL BLOCKS 12PIN/10MM	01	Nos	PHOENIX / ELMEX / WAGO / REPUTED
16	—	WOODEN INSULATOR	01	No	REPUTED
17	SOLAR & BATTERY	LUGS FOR INTERNAL WIRING	01	LOT	EIC / REPUTED
18	—	CABLES & COPPER BUS BAR • POWER CABLE 35 30MM • CONTROL CABLE 1.5SQMM	01	LOT	RR / POLYCAB / REPUTED
19	—	25 SQMM YELLOW/GREEN COLOR EARTHING CABLE	02	Rm	RR / POLYCAB / REPUTED
20	—	END CLAMPS	01	LOT	PHOENIX / ELMEX / WAGO / REPUTED
21	—	[illegible]	01	LOT	REPUTED
22	—	PADLOCK 50x	01	NO	REPUTED

ENCLOSURE DETAILS

GI	• [illegible] • [illegible] • [illegible] • [illegible] • [illegible] • [illegible] • [illegible]	[illegible]

NOTE: [illegible]

DESCRIPTION

THE SHALL CONSIST OF SUITABLE POWDER COATED METAL CABINET IN THE BOX A BREAKER ARRANGEMENT WHICH SHALL CONSIST OF PIECES OF SUITABLE SPECIFICATIONS & WHICH CAN WITHSTAND RESPECTIVE FLOW OF CURRENT, WITH THE PURPOSE OF PROVIDING THE OPTION FOR ISOLATING THE BATTERY BANK & SPV ARRAYS SHOULD BE MADE. THERE SHALL BE COPPER BUS BARS OF SUITABLE RATING. PROPER RATING HRC FUSE & MCCB ISOLATOR FOR DC APPLICATION SHOULD BE SUITABLY INSTALLED. DIGITAL BATTERY BANK ISOLATOR MUST QUALITY AH METER HAS TO BE INSTALLED TO MEASURE THE CUMULATIVE CHARGING & DISCHARGING STATUS OF BATTERY BANK

REV.	DATE	DESCRIPTION
—	—	—

CHHATTISGARH STATE RENEWABLE ENERGY DEVELOPMENT AGENCY (CREDA)

DCDB 20KW CREDA

DRAWN	CHKD.	APPR.	SHEET
[illegible]	[illegible]	[illegible]	[illegible]
DATE [illegible]	DATE [illegible]	DATE [illegible]	REV'D

DWG No.F03.02.0092

SHEET SIZE A4

EARTHIG KIT

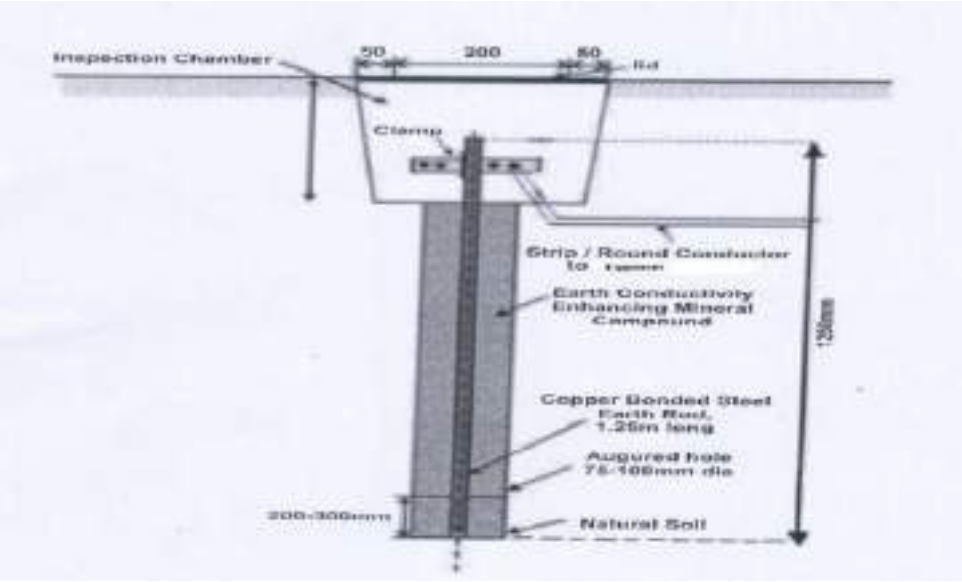

EARTHING KIT & ISTALLATION DETAILS

STAGE 1	STAGE 2	STAGE 3
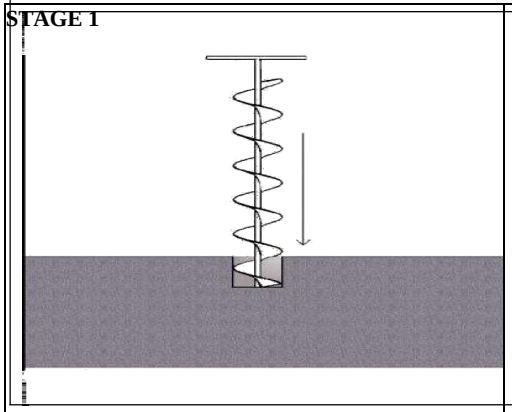	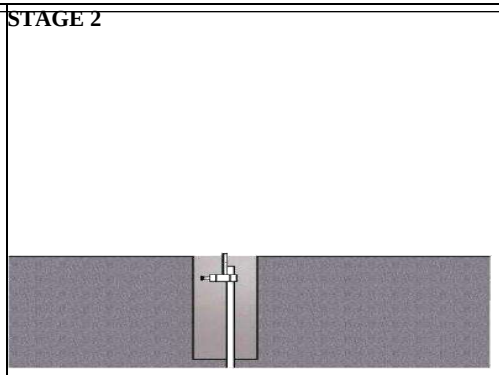	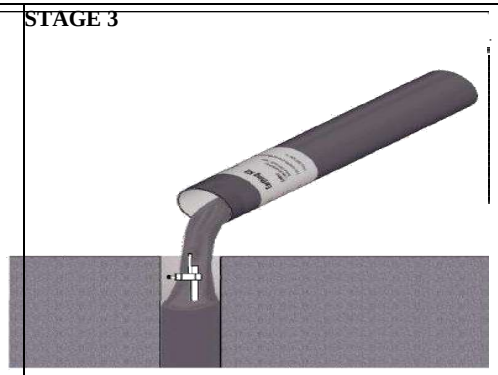

ANNEXURE – V

Technical BID

e-Tender No:		
S.no	**Description**	**To be furnished by the Contractor/Bidder**
A.	**Solar PV Module**	
1	Type of Module: Crystalline/multi-crystalline	
2	Manufacturer	
3	Max power at STC P_{max} (W)	
4	Voltage at Max power Vmp(V)	
5	Current at Max power Imp(A)	
6	Open circuit voltage Voc (V)	
7	Short circuit current Isc (A)	
8	Module efficiency	
9	Rated capacity of SPV panels at STC	
10	Fill factor	
B.	**Battery**	
1	Manufacturer	
2	Type	
3	Capacity of Battery at C10	
4	Max DOD	
5	Charge efficiency	
C	**Battery Rack/Trolley**	
1	Manufacturer	
2	Material	
D	**AC Off-grid Solar Power Conditioning Unit**	
1	Manufacturer:	
2	Operating voltage (DC)	
3	Operating voltage AC (pure sine wave)	
4	THD	
5	Details of Indicators provided	
6	Details of Protections provided	
	i. Battery Over charge set value	
	ii. Deep discharge set value	
	iii. Short Circuit	
	iv. Open Circuit	
	v. Reverse polarity	
	vi. Reverse current	
	vii. Others	

Seal & Signature of Bidder

Important Note:-

Bidder shall have to submit the technical details for each capacity of systems. In case of the use of component of other make prior approval must be taken by CREDA before supply and installation of systems.

ANNEXURE – VI

e-Price Bid
e-Price Bid (For supply, installation, Commissioning &Testing of SPVPP)

Schedule of Rates for SPV Power Plant
(e-bidding as per Specifications & Scope of Work of
BID DOCUMENT No.5363/CREDA/SPV-PP/2026-27 Dated- 31.07.2026)

Rates for the Supply, Installation, Commissioning of Solar Photovoltaic power plant with off-grid PCU with five years CMC and five years onsite warrantee for anywhere in the State of Chhattisgarh as per scope of work, technical requirement, specifications & terms and conditions etc of the tender.

Price Bid Part A

Item Code	**Category**	**Details of solar power plant with LMLA battery bank with Solar Module**	**Rate for supply installation and commissioning of solar power plant including Module, battery, off-grid Inverter, Structure, PCU, Structure Earthing, LA and other complete BOS material with Five years onsite warrantee (Excluding GST& CMC) (In. Rs)**	**Rate of 05 Years CMC (Excluding GST) (In Rs.)**
		Minimum Module cap./Battery Bank Cap./Battery Bank Voltage	**A**	**B**
A1	**Category - I**	1000W/150AH/48V (12V cell allowed)		
A2		2000W/300AH/48V (only 02V battery cell allowed)		
A3		3000W/400AH/48V (only 02V battery cell allowed)		
A4		4000W/400AH/96V (only 02V battery cell allowed)		
A5		6000W/400AH/96V (only 02V battery cell allowed)		
A6		8000W/400AH/120V (only 02V battery cell allowed)		
A7		10000W/300AH/240V (only 02V battery cell allowed)		
A8	**Category - II**	15000W/400AH/240V (only 02V battery cell allowed)		
A9		20000W/600AH/240V (only 02V battery cell allowed)		
A10		25000W/600AH/240V (only 02V battery cell allowed)		
A11		30000W/800AH/240V (only 02V battery cell allowed)		
A12		40000W/1000AH/240V (only 02V battery cell allowed)		
A13		45000W/1000AH/240V (only 02V battery cell allowed)		
A14		50000W/1000AH/240V (only 02V battery cell allowed)		

Note: L1 will be evaluated separately for Column A & B.

Certified that rate quoted above are as per the requirement, specification and terms & condition mentioned in the bid document.

Above rates are FOR anywhere in the State of Chhattisgarh inclusive of roadworthy packing, loading, unloading, all types of incidental expenses, insurance, duties and any other job required to properly execute the work with 5 years warrantee, as mentioned in the Bid document. (Above rates applicable for Solar Power Plant system as per MNRE and CREDA Specifications stated in Bid document (Page 30-44)). The GST payable on the bill produced for payment to CREDA shall be paid in addition to above quoted price as per rate of GST applicable.

(No other cost will be claimed other than above quotes price & the applicable GST)

Signature of the Authorized Signatory: .....

Seal of Company: .....

Date: .....

Price Bid Part B

Item Code	Category	Details of solar power plant with T-Gel battery bank with Solar Module	Rate for supply installation and commissioning of solar power plant including Module, battery, off-grid Inverter, Structure, PCU, Structure Earthing, LA and other complete BOS material with Five years onsite warrantee (Excluding GST& CMC) (In. Rs)	Rate of 05 Years CMC (Excluding GST) (In Rs.)
		Minimum Module cap./Battery Bank Cap./Battery Bank Voltage	**A**	**B**
B1	Category - I	1000W/150AH/48V (12V cell allowed)		
B2		2000W/300AH/48V (only 02V battery cell allowed)		
B3		3000W/400AH/48V (only 02V battery cell allowed)		
B4		4000W/400AH/96V (only 02V battery cell allowed)		
B5		6000W/400AH/96V (only 02V battery cell allowed)		
B6		8000W/400AH/120V (only 02V battery cell allowed)		
B7		10000W/300AH/240V (only 02V battery cell allowed)		
B8	Category - II	15000W/400AH/240V (only 02V battery cell allowed)		
B9		20000W/600AH/240V (only 02V battery cell allowed)		
B10		25000W/600AH/240V (only 02V battery cell allowed)		
B11		30000W/800AH/240V (only 02V battery cell allowed)		
B12		40000W/1000AH/240V (only 02V battery cell allowed)		
B13		45000W/1000AH/240V (only 02V battery cell allowed)		
B14		50000W/1000AH/240V (only 02V battery cell allowed)		

Note: L1 will be evaluated separately for Column A & B.

Certified that rate quoted above are as per the requirement, specification and terms &condition mentioned in the bid document.

Above rates are FOR anywhere in the State of Chhattisgarh inclusive of roadworthy packing, loading, unloading, all types of incidental expenses, insurance, duties and any other job required to properly execute the work with 5 years warrantee, as mentioned in the Bid document. (Above rates applicable for Solar Power Plant system as per MNRE and CREDA Specifications stated in Bid document (Page 30-44)). The GST payable on the bill produced for payment to CREDA shall be paid in addition to above quoted price as per rate of GST applicable.

(No other cost will be claimed other than above quotes price & the applicable GST.)

Signature of the Authorized Signatory: .....

Seal of Company: .....

Date: .....

ANNEXURE – VI

Price Bid Part C

S no	**Details**	**Rate for supply and installation and commissioning of material for module mounting structure Per Kg Excluding GST (In Rs)**
	Module Mounting Structure for SPVPP	**A**
C1	Roof Top Mounted Hot Dip Galvanized MMS 80 MIC.	
C2	Parking Shed type Galvanized MMS 80 MIC.	

Note: L1 will be evaluated separately

Above rates are FOR anywhere in the State of Chhattisgarh inclusive of roadworthy packing, loading, unloading, all types of incidental expenses, 5 years warrantee, insurance and COM as mentioned in the Bid document. Above rates applicable for Module Mounting Structure for each category as per MNRE and CREDA Specifications stated in Bid document (Page 30-44). The GST payable on the bill produced for payment to CREDA shall be paid in addition to above quoted price as per rate of GST applicable at the time of billing.

(No other cost will be claimed other than above quotes price & the applicable GST.)

Signature of the Authorized Signatory: .....

Seal of Company: .....

Date: .....

ANNEXURE – VII

CREDA Logo to be pasted on SPV modules of Solar Power Plant System

ANNEXURE – VIII

DRAFT AGREEMENT

CONTRACT AGREEMENT BETWEEN Chief Engineer Chhattisgarh State Renewable Energy Development Agency (**CREDA**) Raipur AND **M/s……..…** Represented by**……..……** THIS CONTRACT AGREEMENT against **Bid DOCUMENT No. 5363/CREDA/SPV-PP/2026-27 Dated-31-07-2026**(also referred to as "Service Contract") is made on the day of ……2026.

BETWEEN

1. Chief Engineer, Chhattisgarh State Renewable Energy Development Agency (**CREDA**) Raipur a society incorporated under the laws Society Registration Act 1973, (1973, Sr. No. 44) (with amendment from time to time) and having its Registered Office at VIP Road Near Energy Education Park, Village-Fundhar, Raipur and (hereinafter called "The Employer" and also referred to as "CREDA")

And

2. **……**Represented by **……**a company incorporated under the laws of Companies Act 1956/2013/ Partnership firm/ Proprietorship firm/Consortium **(**as applicable**,** with amendment from time to time) and having its Principal place of business at **……**and Registered Office at**……**hereinafter called "The Contractor" and also referred to as "……..**"**

Whereas the contractor has offered to enter into contract with the said CREDA for the Supply, Installation, and Commissioning of Solar Photovoltaic power plant of various capacity with LMLA/T-GEL battery bank with off-grid PCU with five years CMC, with five years onsite warrantee for anywhere in the State of Chhattisgarh.

Vide **BID DOCUMENT No. 5363/CREDA/SPV-PP/2026-27 Dated-31-07-2026** on the terms and conditions herein contained and the rates approved by the CREDA (Letter No. ……. dated……. annexed here to) have been duly accepted and whereas the necessary security deposit shall be furnished in accordance with the provisions of the Bid document and whereas no interest will be claimed on the security deposits.

Now these presents witness and it is hereby agreed and declared by and between parties to these presents as follows -

1) The Contractor shall during the period of this contract, that is to say from ……. To…….. or completion thereof, until this Contract shall be determined by such notice as is hereinafter mentioned, safely carryout, by means of labours employed at his own expenses and by means of tools, implements and equipment etc. to be supplied by him to his labour at his own expenses, for installation of "**Solar power plant**" as described in Bid documents. (Annexed to the agreement).
2) The NIT (Notice Inviting Bid), Corrigendum to NIT, Notices, Bid documents (Qualifying, Technical and Financial), approved rates annexed hereto and such other additional particulars, undertaking, instructions, general conditions of contract, Scope of work, Technical specifications of Solar SPVPP Systems and Annexure therein, engineering documents, detailed specifications of BOS & drawings, so far they relate to the Bid DOCUMENT No. 5363/CREDA/SPV-PP/2026-27 Dated-31.07.2026 as may be found requisite to be given during execution of the work shall be deemed and taken to be an integral part of the contract and shall also be deemed to be included in the expression "The Agreement or "The Contract "wherever here in used.
3) The contractor shall also supply the requisite number of workmen with means &materials as well as tools, appliances, machines, implements, vehicles for transportation, cartage etc. required for the proper execution of work within the time prescribed in the work orders and /or as per the Bid conditions.
4) The Engineer in Charge or his authorized representative (s) shall be entitled at all reasonable times to inspect and supervise and test during installation and commissioning. Such inspection will not relieve the eligible SI from their obligations under this contract.
5) Material can be inspected before dispatch or in transit by the authorized representatives of CREDA at

the factory at the cost of the eligible SI, if desired by CREDA. CREDA reserves right to inspect the material at Godowns / Temporary Stores before dispatch and also at works sites.

6) CREDA shall deduct TDS for Income Tax, applicable cess on Civil Work etc. under various acts and deposited with the appropriate authority. Costs and taxes before execution of agreement with CREDA so as to ensure tax deposition as per Government Rules accordingly.

7) ELIGIBLE SYSTEM INTEGRATOR'S LIABILITY IN CASE OF DEFAULT-

CREDA may by written notice of default to the eligible SI, terminate the contract in circumstances detailed hereunder -

a. If in the opinion of the CREDA, the eligible SI fails to complete the work within the time specified in the Work Order or within the period for which extension has been granted by CREDA to the eligible SI.

b. If in the opinion of CREDA, the eligible SI fails to comply with any of the provisions of this contract.

c. In the event of CREDA terminating the contract in whole or in part as provided in paragraph (a) above, CREDA reserves the right to engage another eligible SI or agency upon such terms and in such a manner as it may deem appropriate and the eligible SI shall be liable to CREDA for any additional costs or any losses caused to CREDA as may be required for the completion of erection of the SPV Power Plant and or for penalty as defined under this Bid document until such reasonable time as may be required for the final completion of the work. CREDA may debar such a defaulter SI for up to three years from taking participation in taking part in all activities of CREDA.

d. In the event CREDA does not terminate the contract as provided in paragraph (a) the eligible SI shall continue performance of the contract, in which case he shall be liable to CREDA for penalty for delay as set out in clause 16 until the work is completed.

8) FORCE MAJEURE-

The eligible SI shall not be liable for any penalty for delay or for failure to perform the contract for reasons of FORCE MAJEURE such as of God, acts of public, enemy, LWE problems, acts of government, cyclone, fires, floods, epidemics, quarantine restrictions, strikes, freight embargoes provided that if SI shall submit delay notice with appropriate cause of delay to the CREDA in writing within **15 days** of force majeure. CREDA shall verify the facts and may grant such extension as facts justify. Delay in supply of any accessories of Solar power plants etc. by the related vendors, to whom the Bidder has placed order, shall also not be treated as force majeure.

9) REJECTION OF WORKS -

In the event of any of the material supplied/work done by the eligible SI is found defective in material or workman ship or otherwise not in conformity with the requirements of this contract specifications, CREDA shall either reject the material and/or work and advise the eligible SI to rectify the same. **CREDA may impose penalty for such rejection up to the 200% cost of the entire system. Habitual/repeated offenders shall be black listed/debarred to participate in the any Bid/ Activity of CREDA for a period up to three (3) years.** The eligible SI on receipt of such notices shall rectify or replace the defective material and rectify the work free of cost. If the eligible SI fails to do so CREDA may-

a. At its option replace or rectify such defective materials and/or work and recover the extra cost so involved from the eligible SI plus **15%** service charges of the cost of such rectification, from the eligible SI and/ or terminate the contract for balance work/ supplies with enforcement of penalty **as stated above**.

b. Defective materials/workmanship will not be accepted under any conditions and shall be rejected outright without compensation. The eligible SI shall be liable for any loss/damage sustained by CREDA due to defective work **with enforcement of penalty as stated above**.

10) EXTENSION OF THE TIME-

If the completion of installation is delayed due to any reason beyond the control of the eligible SI, the eligible SI shall without delay give notice to the CREDA in writing of his claim for an extension of time. CREDA on receipt of such notice may or may not agree to extend the contract/delivery date of the SPV Power Plant as may be reasonable but without prejudice to other terms and conditions of the contract.

Chief Executive Officer, CREDA has full right for unconditional time extension.

11) PENALTY FOR DELAY IN COMPLETION OF CONTRACT-

a. If the eligible SI fails to complete the assigned work within the schedule time specified in the Work Order or any extension granted there to, CREDA will recover from the SI as penalty of **half (0.5) percent per week** or up to **Two Percent (02%) per month** of the system price excluding GST for every delayed system. For this purpose, the date of taking over shall be reckoned as the date of completion. The total penalty shall not exceed **05% (Five Percent)** of the cost. The eligible SI shall not be liable for any penalty for delay or for failure to perform the contract for reasons of FORCE MAJEURE

b. Review of the progress of installation of Solar Power Plant allocated to SIs shall be done time to time by CREDA and if the progress of installation is found unsatisfactory, the allocation of entire remaining uninstalled system or their part of can be re-allocated to other SI as per discretion of CREDA

12) PENALTY DUE FROM THE ELIGIBLE SI-

All costs of damages and delays for which the eligible SI is liable to the CREDA will be deducted from any money due to the eligible SI including the security deposit of any project under CREDA.

13) RESPONSIBILITY OF ELIGIBLE SI'S -

Notwithstanding anything mentioned in the specifications of subsequent approval or acceptance of the SPV Power Plant by CREDA, if any, the ultimate responsibility for satisfactory performance of the entrusted work shall rest with the eligible SI. If in any case the eligible SI does not complete the work as per the Work Orders issued to them then CREDA may take over the task & complete the project at the risk and cost of eligible SI.

14) RESPONSIBILITY TO RECTIFY THE LOSS AND DAMAGE-

If any loss or damage occurs to the work or any part thereof or materials/plant/equipment's for incorporation therein the period for which the eligible SI is responsible for the cause thereof or from any cause whatsoever, the eligible SI shall at his own cost rectify/replace such loss or damage, so that the permanent work confirms in every respect with the provision of the contract to the satisfaction of the Engineer. The eligible SI shall also be liable for any loss or damage to the work/equipment's occasioned by him in course of any operation carried out to him during performing the contract.

15) RESPONSIBILITY TOWARDS THE WORKMAN OR OUT SIDERS-

a. The eligible SI shall have to take insurance coverage from any authorized Insurance Company against Workmen compensation due under Workmen Compensation Act and submit copy of the insurance document before issuance of Work Order.

b. The eligible SI shall ensure all safety measures during execution and repairs of the work. CREDA, will, in no case be responsible for any accident fatal or non-fatal, caused to any workman or outsider in course of transport or execution or repairs of work.

c. All the expenditure including treatment or compensation will be entirely borne by the eligible SIs. The eligible SI shall also be responsible for any claims of the workers including PF, Gratuity, ESI & other legal obligations.

d. CREDA shall have all rights to deduct such claims of payments from SI in case of complaints of such violations.

16) Bidder shall provide 05 years warranty in installed solar SPVPP from the date of commissioning as per the terms & conditions prescribed in the **BID DOCUMENT No. 5363/CREDA/ SPV-PP/2026-27 Dated-31.07.2026.**

17) **DECLARATION OF CONFLICT OF INTEREST -**

a. Any regular employee working or worked on basis of contract or through placement agency cannot work directly or indirectly in any scheme of CREDA. If such a person is found working with any SI or through sublet then, such SI shall be blacklisted **for a period up to three (3) years**.

b. The bidder shall not be permitted to Bid for this Tender, if any relative of bidder is employee of CREDA working as regular employee or work on the basis of contract or through placement

agency.

Note: - By the term near relatives are meant Wife, Husband, Parents and son, Brother, Sister, Brother-in-law, Father-in-law, and Mother-in-law etc.

c. Contractor must produce an affidavit (**Annexure – III**) stating the names of retired/removed employee of CREDA (if any) in his employment who retired /removed within last two years, if in case there is no such person in his employment, his affidavit should clearly state this fact. This affidavit is mandatory, if it is not produced along with the bid, the bid shall be rejected.

18) The Contractor shall arrange insurance coverage for the materials and SPV power plants at his/beneficiary's custody for the work under execution and successful commissioning and subsequent handover to the beneficiary. The bidder shall take up insurance or such other measures for the manpower so as to cover the claim for damage arising under workmen's compensation Act and other applicable State/ Central laws. CREDA shall not bear any responsibility on this account. Bidder shall arrange for insurance coverage for SPV power plants and module during CMC period i.e. for 05 years from the date of installation. Insurance should cover for damage and theft. In case of such incidence, SI must replace the lost/damaged part within 7days.

19) The Contractor shall abide by the terms and conditions, rules, guidelines, construction practices, safety precautions etc. stipulated in the Bid document including any correspondence between the Bidder and the **CREDA** having bearing on execution of work and payments of work to be done under the contract.

20) The Contractor shall be responsible to follow all the laws including Workmen Compensation Act and all other laws in force & shall be responsible for all the obligations towards labour including EPF, ESI, etc.

21) All the taxes deductible at source as per Acts in vogue shall be recovered by **CREDA** and deposited with the appropriate authorities

22) Contractor agrees to abide by any decision/instruction passed by the appropriate authority under Anti-profiteering rules notified by the state/central government under GST act.

23) Any dispute arising out of the contract shall be subject to the jurisdiction of Hon'ble High Court of Chhattisgarh.

"Herewith everything and anything contained in Bid document no. 5363/CREDA/SPV-PP/2026-27 Dated: 31.07.2026 is part of this agreement which has been dully signed by both bidder and authorized signatory of CREDA".

In witness whereof the parties present today has hereby entered into agreement.

Signed & sealed on behalf of the above

Name of Bidder	**Signed on behalf of CREDA**
Name:	Name:
Designation:	Designation:

Witness:

1. Name:-…….. 2.Name:……

Address:-…….… Address:……

ANNEXURE – IX

Ref. Bid Document No.:_____.

DECLARATION FOR USING SAME MAKE OF EQUIPMENTS AS PER THE TEST CERTIFICATE

From:

M/s_____
_____
_____
_____

Sub: Declaration for using same make of equipment's as per the test certificate

We are agreeing to accept that the same make of solar panels, battery, inverter, controller, ACDB, DCDB, AJB, MJB for which the test report is to be submitted under this Bid to CREDA, is as per Guidelines and Procedures mentioned in the bid and will be supplied by us. We declare to procure the components mentioned above only from the Vendors registered with CREDA.

Incase if some different make of panels, battery, inverter, controller, ACDB, DCDB, AJB, MJB will be supplied during the implementation or CMC period, we will submit the test report for that particular make component(s). We also agree that such test reports shall be issued by the National Institute of Solar Energy and any other lab accredited by NABL for testing of solar PV power plant system as per MNRE specifications and testing procedure.

Name of Authorized Signatory

Signature of suppliers
(With stamp)

ANNEXURE – X

CERTIFICATE OF QUARTERLY VISITS

(To be submitted by SI during CMC period)

(From …….. To ……)

This is to certified that we have extended preventive / routine maintenance and breakdown / corrective maintenance services for the solar power plant system installed under SPV POWER PLANT scheme as per beneficiary list attached of District _____ and that the preventive / routine maintenance and breakdown /corrective maintenance work during the period (from _____ to_____) of the year _____ has been done properly to ensure functionality of the systems as specified in the Tender terms & conditions and agreement.
This is also to certify that ..... nos of systems are working satisfactorily out of..... nos of total installed systems. The record of preventive / routine maintenance and breakdown / corrective maintenance work carried out by us is kept in our record at our service station.

Signature, Name, Designation and Seal of System Integrator

Date : ……
Place : ……

Signature, Name, Designation and Seal of District In-charge of CREDA

SCHEDULE - I
PART 'A': GENERAL INFORMATION

(Strike off whichever is not applicable. Separate sheets should be used, wherever necessary)

01. Name & Address of the Bidder :

02. Name & Address of the firm/Company etc. :

a) Registered office :

b) Factory/works address :

c) Fax Nos. :

d) Telephone /Mobile Nos. :

e) Email id :

03. Confirm whether Bidder is Manufacturer : Yes/No

04. Only manufacturer to give following particulars

a) Address of factory :

b) Year of starting manufacture :

c) Whether same/similar materials Manufactured earlier (if yes, give reference) :

d) Yearly/monthly production capacity :

e) Maximum yearly production Achieved so far :

05. Whether the firm is SSI Unit of Chhattisgarh State : Yes/No

a) If yes, write registration No. :

b) Whether documentary evidence Regarding registration enclosed :

c) Items for registration :

d) Period of registration :

e) Whether latest copy Competency/ Certificate furnished: Yes/No

06. Whether the firm is 100% owned by

a) State Government : Yes/No

b) Central Government : Yes/No

If yes, Notification/certificate issued from : Yes/No

The competent authority to this effect is enclosed

a) Whether the bidder is old participant with CREDA : Yes/No

b) If yes, whether documentary Evidence is enclosed. : Yes/No

07. Any other information that bidder may like to give in order to highlight his bid If yes, give details : Yes/No

PLACE: **SIGNATURE OF BIDDER**

NAME IN FULL

DATE: DESIGNATION/STATUS

FIRM/COMPANY SEAL

SCHEDULE - II

PART 'B': COMMERCIAL INFORMATION

(Strike off, whichever is not applicable. Separate sheets should be used. Wherever necessary)

01. i) Earnest Money Details : Bank draft/Bankers cheque payable to "CREDA", Raipur

ii) Amount of E.M.D. &full details : .....

02. Whether the offer is valid for 6months : Yes/No

from the date of opening of commercial/technical bid.

03. Rate of Sales Tax on the date of bid :(exclusive in the rate quoted)

04. **DISCOUNT**:

a) Whether any rebate/discount is offered. : Yes/No

b) If yes, whether the rebate is unconditional/conditional : Yes/No
Rate/amount of rebate/discount

c) If conditional State condition : Yes/No

05. **PAYMENT TERMS**:
Whether CREDA's terms of payment is acceptable to Bidder : Yes/No

06. **COMPLETION PERIOD OFWORK**:
Whether Bidder is agreeing for completion period of work as Specified in the Bid : Yes/No

07. **PENALTY CLAUSE**:
Whether agreeable to CREDA's Penalty Clause : Yes/No

08. Whether agreeable to CREDA's clause of warrantee period : Yes/No

09. **SECURITY DEPOSIT**:
Whether Security Deposit clause is understood : Yes/No

10. Indicate State, Central Sales Tax Registration Number State : Yes/No
Central: (Please Note that in case of non-registration with Commercial Tax, Department Purchase Tax as admissible shall be deducted by the Purchaser from the Bills of the supplier)

11. Please mention whether rates offered are applicable for : Yes/No

part quantities.

PLACE:

SIGNATURE OF BIDDER

DATE:

NAME INFULL

DESIGNATION/STATUS

FIRM/COMPANY SEAL

SCHEDULE -III

PART 'C': TECHNICAL INFORMATION

(Strike off whichever is not applicable. Separate sheets should be used. Wherever necessary)

01. Whether material offered is exactly as per technical specification : Yes/No

02. Whether the copies of completion certificate received from other State Nodal Agency or from other Organization for Solar SPVPP systems (if yes, give details) enclosed. : Yes/No

03. Whether pamphlets/technical details literatures along with drawing etc. furnished with the offer (if yes, give details) : Yes/No

04. Whether the Bidder agrees to furnish material test certificates in respect of chemical composition and physical properties from Govt./ Govt. approved lab with each batch of supplies. : Yes/No

05. Whether the Bidder has furnished details of manufacturing equipment and short history of plant (if yes, give details) : Yes/No

06. Whether details of manufacturing process furnished with offer. (if yes, give details) : Yes/No

07. Whether all testing facilities are available. : Yes/No
If so, give details and in case of non-availability of facilities indicate approved lab available in surrounding areas where tests are proposed to be conducted.

PLACE

DATE

SIGNATURE OFBIDDER

NAME INFULL

DESIGNATION/STATUS

FIRM/COMPANY

SEAL

SCHEDULE -IV

TECHNICAL DEVIATIONS

From,

Bidder Name & Address -

To,

The CE,

CREDA, HO,

Raipur

Sub – Technical Deviations.

Dear Sir,

01. The technical deviations & variations to the specifications stipulated in the Bid, for the item quoted are as under -

Sl. No.	Condition	Clause No. of Tender Document	Page No. of Tender Document	Statement of deviations and variations

02. Except aforesaid deviations, the entire order, if placed, on us shall be executed in accordance with your specifications and other conditions. Variation/deviations etc. if found, elsewhere in our offer should not be given any considerations while finalizing the Bid.

PLACE **SIGNATURE OFBIDDER**

DATE NAME INFULL

DESIGNATION/STATUS FIRM/COMPANY SEAL

NOTE - Continuation sheet of like size & format may be used as per bidder's requirements and shall be annexed to this schedule.

SITE CLEARANCE CERTIFICATE

FORM - A

1. Name of Site :-…….

2. Name of Beneficiary :-…….

3. Capacity in Watt & Type of Solar Power plant:-…….

4. Layout of site indicating location of SPV modules/Collector& Control Room :-…….

5. Size of Control Room available :-…….

6. Available shadow free space selected for installation of SPV modules :-…….M^2

7. Load details and comment on connectivity with grid and load :-…….

8. Name of beneficiary's contact person & his mobile no. who shall be responsible for installation& Commissioning of Solar Power Plant :-…….

9. Electricity bill of site of current month is enclosed:-…….

It is hereby certified that site is technically clear for installation.

Beneficiary/Sarpanch/ Surveyor/Representative of Company

(Signature & Seal) (Signature & Seal)

Assistant Engineer/District Incharge
CREDA, District Office
(Signature & Seal)

Plan of Site

FORM - B

Village/Site:-……

Block:-……

District:-…… Date:-……

PLANFORIDENTFIEDSITE

Note:-All distance mentioned should be in meters directions of mention for MP.

Assistant Engineer/District Incharge Surveyor/Representative of CREDA, District Office
Company

(Signature & Seal) (Signature & Seal)

Additional Terms & Condition

The quantity of purchase of solar off-grid power plant is not fixed. CREDA will procure the solar off-grid power plant based on the target/work/fund given by the various agencies. The quantity of solar off-grid power plant (increase/decrease) vary as per fund available. The delivery location under the above procurement is not fixed. The order will be placed for supply, installation and commissioning of solar off-grid power plant anywhere in the State of Chhattisgarh i.e. in any district of Chhattisgarh State.

END